EtherCAT Communication

Communication Principles

Agenda

- EtherCAT Basics
- Slave Structure
- Device Model
- Physical Layer
- Data Link Layer
  - Frame Structure
  - Addressing, Commands
  - Memory, SyncManager, FMMUs
  - Diagnosis
- Distributed Clocks
- Application Layer
  - State Machine
  - Mailbox (Mailbox Protocols)
  - Slave Information Interface (EEPROM)
- Device Profiles
  - Modular Devices
  - Drives
- Device Description
- Tools (Configuration Tool, Monitor, …)
- EtherCAT Master
- Standard & References

© EtherCAT Technology Group

EtherCAT: versatile system architecture

EtherCAT Basics
Slave Structure
Device Model (ISO/OSI)
Physical Layer
Data Link Layer
- Frame Structure
- Addressing
- Commands
- Memory/Registers
- SyncManager
- FMMU
- Diagnosis

Distributed Clocks
Application Layer
- State Machine

Mailbox
- Mailbox Interface
- EoE Ethernet
- CoE CANopen
- FoE File Access
- SoE Servo Drive

ESI: Device Description
SII: Slave Information /IF
Device Profiles
- Modular Devices
- Drives

Configuration Tool
EtherCAT Master
Standards&Implementation

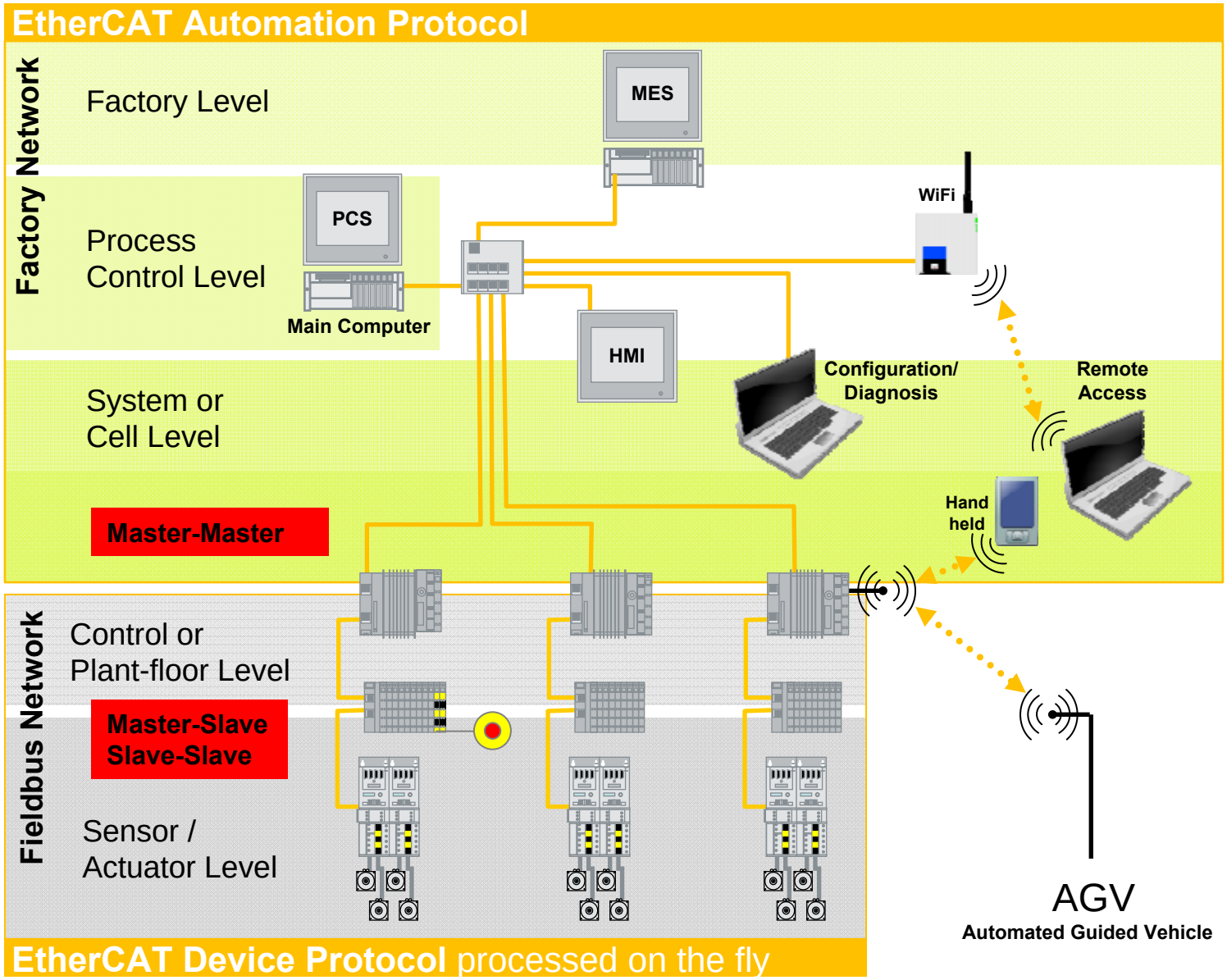

© EtherCAT Technology Group

Requirements for factory network communication

EtherCAT Basics
Slave Structure
Device Model (ISO/OSI)
Physical Layer
Data Link Layer
Frame Structure
Addressing
Commands
Memory/Registers
SyncManager
FMMU
Diagnosis
Distributed Clocks
Application Layer
State Machine
Mailbox
Mailbox Interface
EoE Ethernet
CoE CANopen
FoE File Access
SoE Servo Drive
ESI: Device Description
SII: Slave Information /IF
Device Profiles
Modular Devices
Drives
Configuration Tool
EtherCAT Master
Standards&Implementation

- Communication between EtherCAT Master devices (Master-Master communication)
- Communication between EtherCAT Master and visualization
- Access to devices in underlying EtherCAT segments from the control level
- Access from configuration tools
  - Configuration of the Master-Master communication
  - Configuration of underlying sub-devices (e.g. Drives, Gateways,…)
    Routing through EtherCAT Master
- Standard Ethernet interfaces
- No strict requirements regarding cycle time and synchronization
- Cycle time in the range of milliseconds
- Use of standard infrastructure devices (switches)

© EtherCAT Technology Group

EtherCAT Automation Protocol (EAP)

EtherCAT Basics
Slave Structure
Device Model (ISO/OSI)
Physical Layer
Data Link Layer
Frame Structure
Addressing
Commands
Memory/Registers
SyncManager
FMMU
Diagnosis
Distributed Clocks
Application Layer
State Machine
Mailbox
Mailbox Interface
EoE Ethernet
CoE CANopen
FoE File Access
SoE Servo Drive
ESI: Device Description
SII: Slave Information /IF
Device Profiles
Modular Devices
Drives
Configuration Tool
EtherCAT Master
Standards&Implementation

- Protocol for Master-Master communication
- Process data communication as well as Mailbox communication
- Same principles used as for EtherCAT Device communication
  - PDO Mapping
  - Mailbox protocols
  - Object dictionary
- Communication via standard Ethernet Network or other communication technologies, for example
  - Additional Ethernet port on Master device
  - Switchport
  - Wireless connection
- Master Object dictionaries contains information for configuration tools
- Telegram structure is part of the IEC 61158-x-12 series

© EtherCAT Technology Group

Functional Principle: Ethernet “on the Fly“

EtherCAT Basics
Slave Structure
Device Model (ISO/OSI)
Physical Layer
Data Link Layer
Frame Structure
Addressing
Commands
Memory/Registers
SyncManager
FMMU
Diagnosis
Distributed Clocks
Application Layer
State Machine
Mailbox
Mailbox Interface
EoE Ethernet
CoE CANopen
FoE File Access
SoE Servo Drive
ESI: Device Description
SII: Slave Information /IF
Device Profiles
Modular Devices
Drives
Configuration Tool
EtherCAT Master
Standards&Implementation

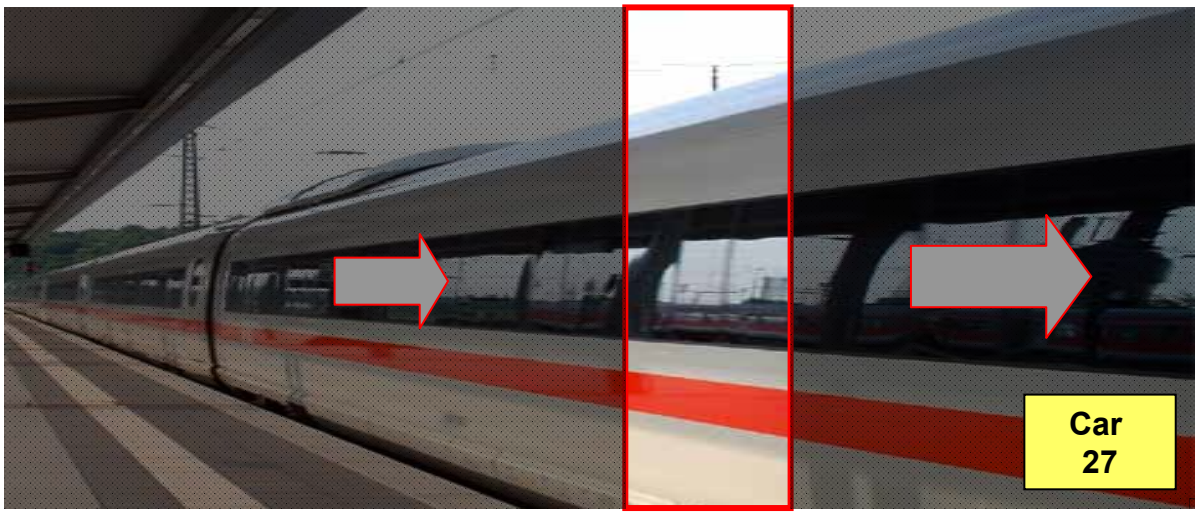

Analogy Fast Train:

- “Train“ (Ethernet Frame) does not stop
- Even when watching “train“ through narrow window one sees the entire train
- “Car“ (Sub-Telegram) has variable length
- One can “extract“ or “insert“ single “persons“ (Bits) or entire “groups“ – even multiple groups per train

© EtherCAT Technology Group

Functional Principle: Ethernet “on the Fly“

EtherCAT Basics
Slave Structure
Device Model (ISO/OSI)
Physical Layer
Data Link Layer
Frame Structure
Addressing
Commands
Memory/Registers
Synchmanager
FMMU
Diagnosis
Distributed Clocks
Application Layer
State Machine
Mailbox
Mailbox Interface
EoE Ethernet
CoE CANopen
FoE File Access
SoE Servo Drive
ESI: Device Description
SII: Slave Information /IF
Device Profiles
Modular Devices
Drives
Configuration Tool
EtherCAT Master
Standards&Implementation

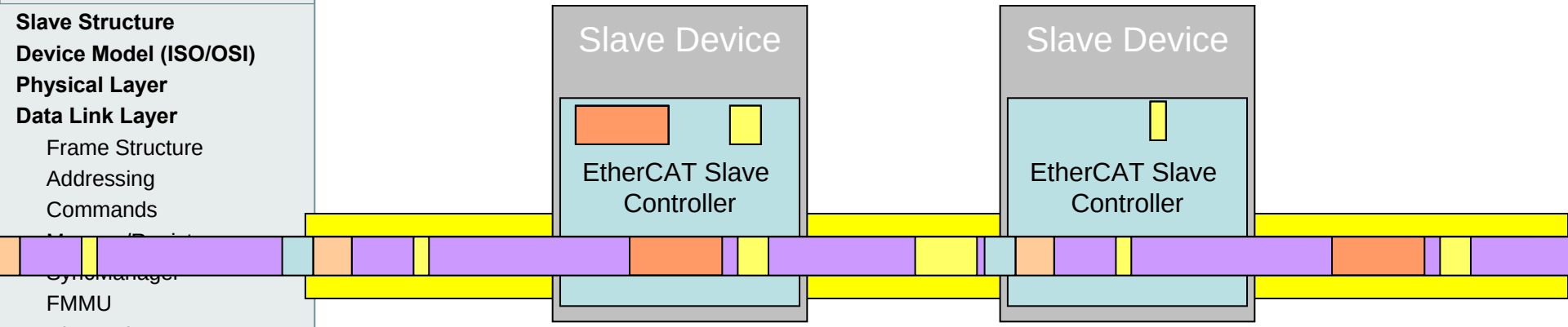

- Process data is extracted and inserted on the fly
- Process data size per slave almost unlimited (1 Bit…60 Kbyte, if needed using several frames)
- Compilation of process data can change in each cycle, e.g. ultra short cycle time for axis, and longer cycles for I/O update possible
- In addition asynchronous, event triggered communication

© EtherCAT Technology Group

Topology

EtherCAT Basics
Slave Structure
Device Model (ISO/OSI)
Physical Layer
Data Link Layer
Frame Structure
Addressing
Commands
Memory/Registers
SyncManager
FMMU
Diagnosis
Distributed Clocks
Application Layer
State Machine
Mailbox
Mailbox Interface
EoE Ethernet
CoE CANopen
FoE File Access
SoE Servo Drive
ESI: Device Description
SII: Slave Information /IF
Device Profiles
Modular Devices
Drives
Configuration Tool
EtherCAT Master
Standards&Implementation

- Flexible Topology
  - Line
  - Daisy chain
  - Daisy chain with branches
  - Tree Structure
  - Star
  - Cable Redundancy
- Any number of physical layer changes possible
- Standard Ethernet 100m cable distance between 2 devices
- Fiber Optics for larger distances
- Up to 65,535 devices within one EtherCAT network possible

© EtherCAT Technology Group

Topology – Line topology

EtherCAT Basics
Slave Structure
Device Model (ISO/OSI)
Physical Layer
Data Link Layer
- Frame Structure
- Addressing
- Commands
- Memory/Registers
- SyncManager
- FMMU
- Diagnosis

Distributed Clocks
Application Layer
- State Machine

Mailbox
- Mailbox Interface
- EoE Ethernet
- CoE CANopen
- FoE File Access
- SoE Servo Drive

ESI: Device Description
SII: Slave Information /IF
Device Profiles
- Modular Devices
- Drives

Configuration Tool
EtherCAT Master
Standards&Implementation

- Arbitrary number of devices in a line
- Up to 65,535 devices

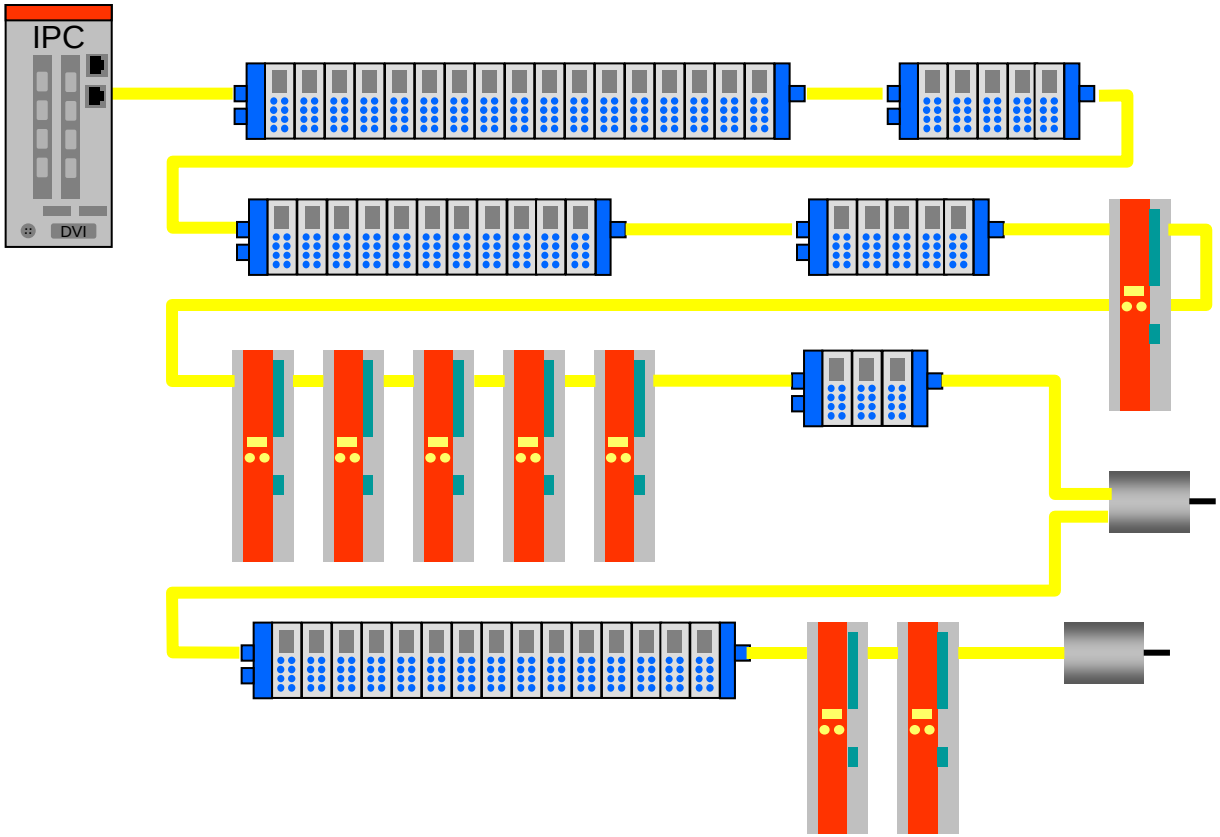

© EtherCAT Technology Group

Topology – Daisy Chain

EtherCAT Basics
Slave Structure
Device Model (ISO/OSI)
Physical Layer
Data Link Layer
Frame Structure
Addressing
Commands
Memory/Registers
SyncManager
FMMU
Diagnosis
Distributed Clocks
Application Layer
State Machine
Mailbox
Mailbox Interface
EoE Ethernet
CoE CANopen
FoE File Access
SoE Servo Drive
ESI: Device Description
SII: Slave Information /IF
Device Profiles
Modular Devices
Drives
Configuration Tool
EtherCAT Master
Standards&Implementation

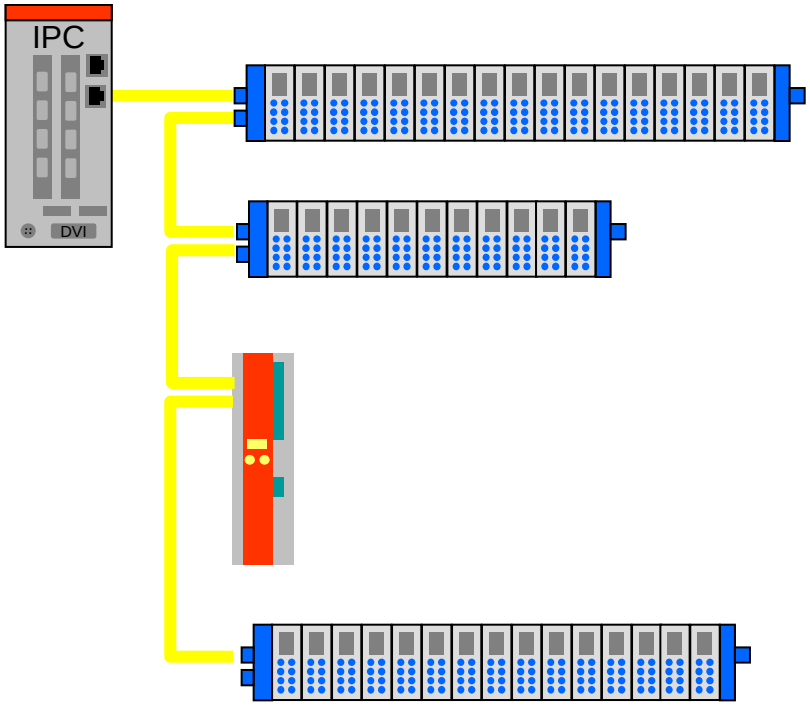

© EtherCAT Technology Group

Topology – Daisy Chain with drop lines

EtherCAT Basics
Slave Structure
Device Model (ISO/OSI)
Physical Layer
Data Link Layer
- Frame Structure
- Addressing
- Commands
- Memory/Registers
- SyncManager
- FMMU
- Diagnosis

Distributed Clocks
Application Layer
- State Machine

Mailbox
- Mailbox Interface
- EoE Ethernet
- CoE CANopen
- FoE File Access
- SoE Servo Drive

ESI: Device Description
SII: Slave Information /IF
Device Profiles
- Modular Devices
- Drives

Configuration Tool
EtherCAT Master
Standards&Implementation

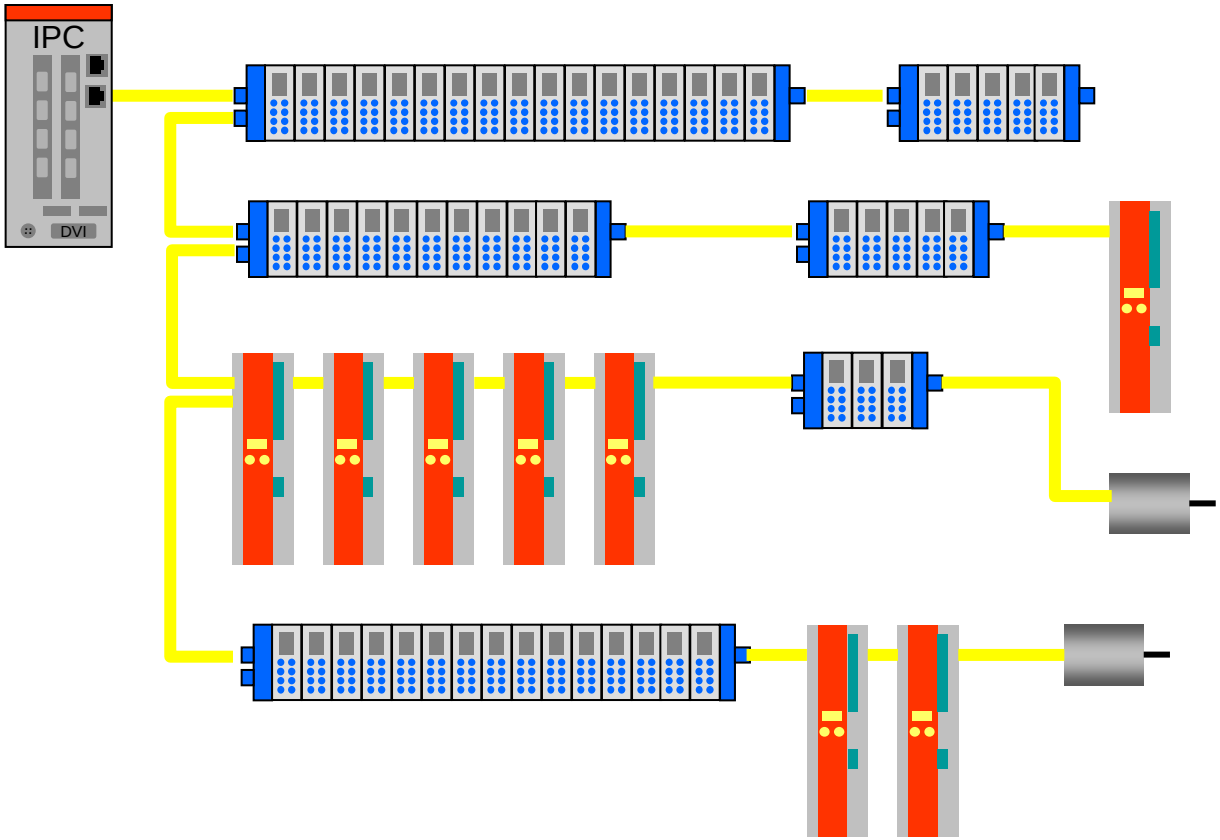

© EtherCAT Technology Group

Topology – Tree structure

EtherCAT Basics
Slave Structure
Device Model (ISO/OSI)
Physical Layer
Data Link Layer
- Frame Structure
- Addressing
- Commands
- Memory/Registers
- SyncManager
- FMMU
- Diagnosis

Distributed Clocks
Application Layer
- State Machine

Mailbox
- Mailbox Interface
- EoE Ethernet
- CoE CANopen
- FoE File Access
- SoE Servo Drive

ESI: Device Description
SII: Slave Information /IF
Device Profiles
- Modular Devices
- Drives

Configuration Tool
EtherCAT Master
Standards&Implementation

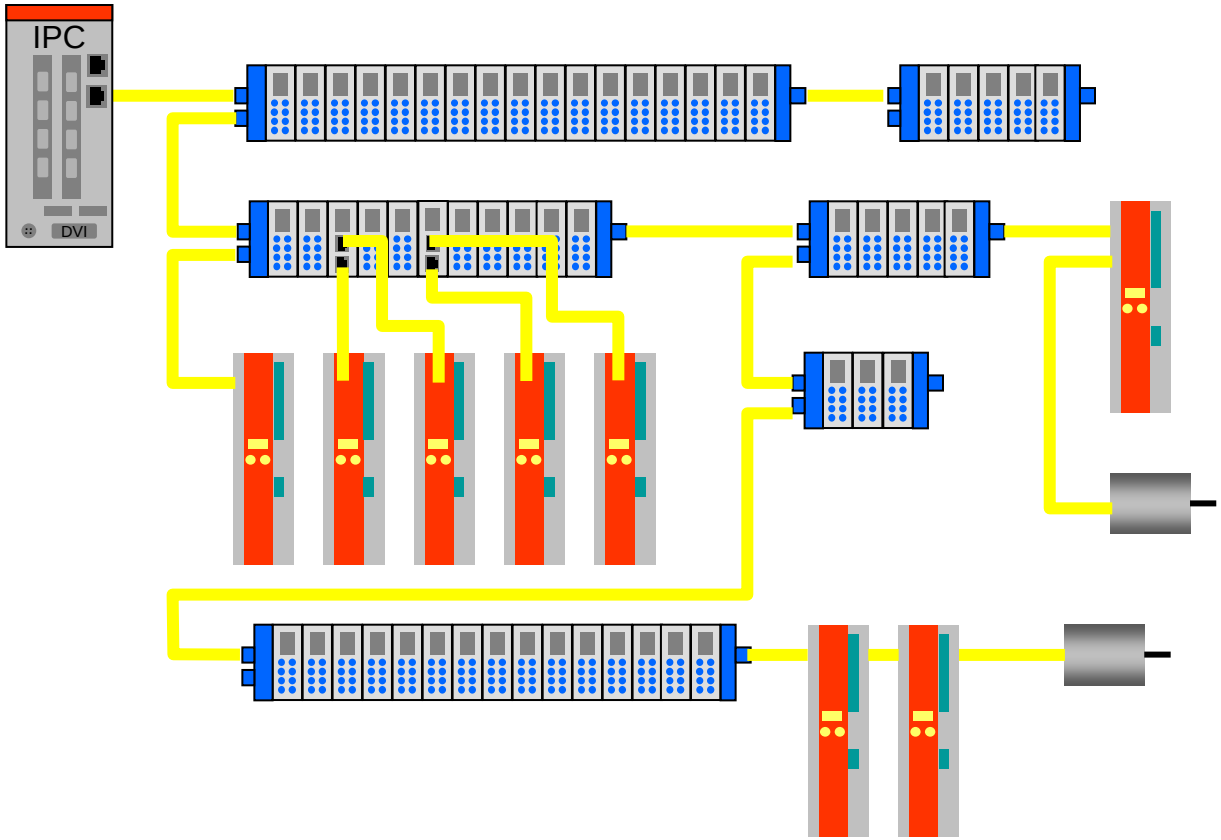

© EtherCAT Technology Group

Topology – Star topology with real time

EtherCAT Basics
Slave Structure
Device Model (ISO/OSI)
Physical Layer
Data Link Layer
- Frame Structure
- Addressing
- Commands
- Memory/Registers
- SyncManager
- FMMU
- Diagnosis

Distributed Clocks
Application Layer
- State Machine

Mailbox
- Mailbox Interface
- EoE Ethernet
- CoE CANopen
- FoE File Access
- SoE Servo Drive

ESI: Device Description
SII: Slave Information /IF
Device Profiles
- Modular Devices
- Drives

Configuration Tool
EtherCAT Master
Standards&Implementation

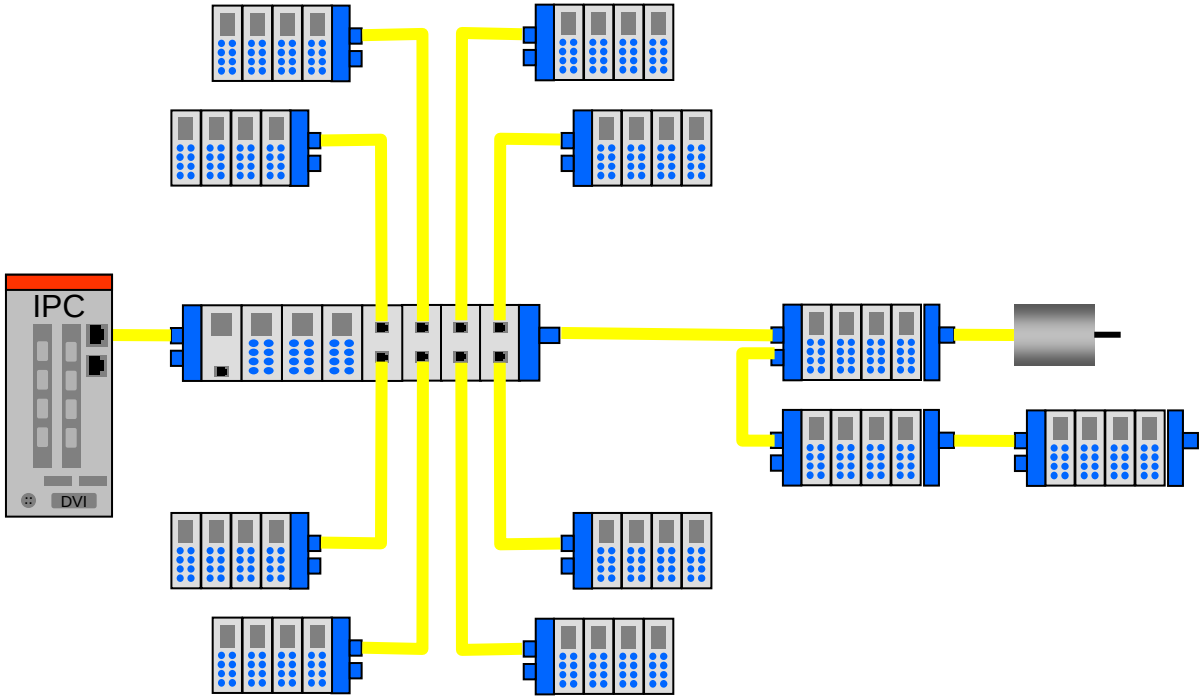

© EtherCAT Technology Group

Cable Redundancy

EtherCAT Basics
Slave Structure
Device Model (ISO/OSI)
Physical Layer
Data Link Layer
Frame Structure
Addressing
Commands
Memory/Registers
SyncManager
FMMU
Diagnosis
Distributed Clocks
Application Layer
State Machine
Mailbox
Mailbox Interface
EoE Ethernet
CoE CANopen
FoE File Access
SoE Servo Drive
ESI: Device Description
SII: Slave Information /IF
Device Profiles
Modular Devices
Drives
Configuration Tool
EtherCAT Master
Standards&Implementation

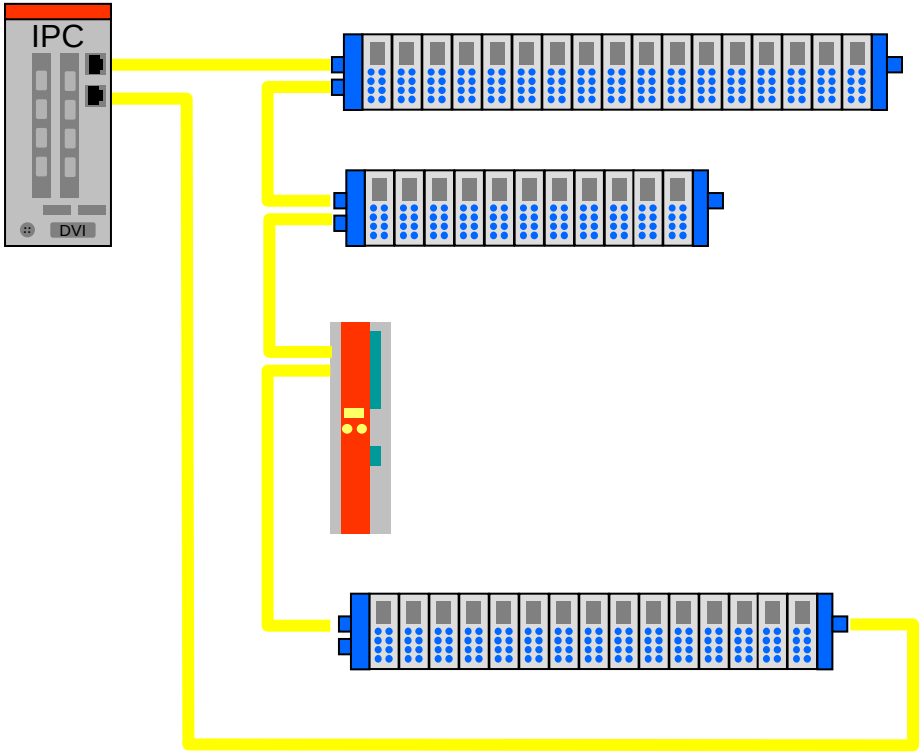

- Only a second Ethernet Port is needed on the master – possible with all EtherCAT Slave devices

© EtherCAT Technology Group

Without Redundancy: Normal Operation

EtherCAT Basics
Slave Structure
Device Model (ISO/OSI)
Physical Layer
Data Link Layer
Frame Structure
Addressing
Commands
Memory/Registers
SyncManager
FMMU
Diagnosis
Distributed Clocks
Application Layer
State Machine
Mailbox
Mailbox Interface
EoE Ethernet
CoE CANopen
FoE File Access
SoE Servo Drive
ESI: Device Description
SII: Slave Information /IF
Device Profiles
Modular Devices
Drives
Configuration Tool
EtherCAT Master
Standards&Implementation

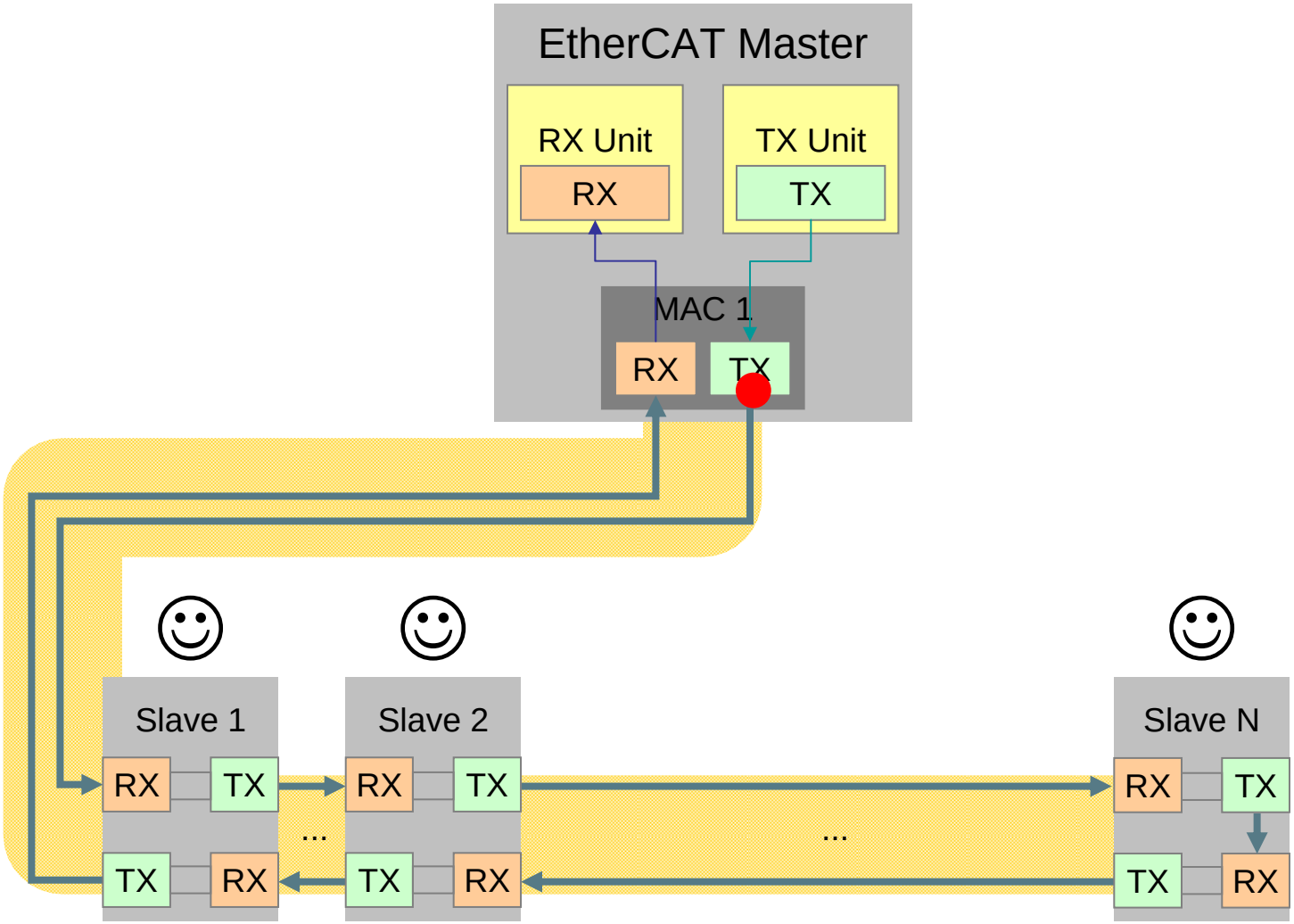

© EtherCAT Technology Group

Without Redundancy: Cable Failure

EtherCAT Basics
Slave Structure
Device Model (ISO/OSI)
Physical Layer
Data Link Layer
Frame Structure
Addressing
Commands
Memory/Registers
SyncManager
FMMU
Diagnosis
Distributed Clocks
Application Layer
State Machine
Mailbox
Mailbox Interface
EoE Ethernet
CoE CANopen
FoE File Access
SoE Servo Drive
ESI: Device Description
SII: Slave Information /IF
Device Profiles
Modular Devices
Drives
Configuration Tool
EtherCAT Master
Standards&Implementation

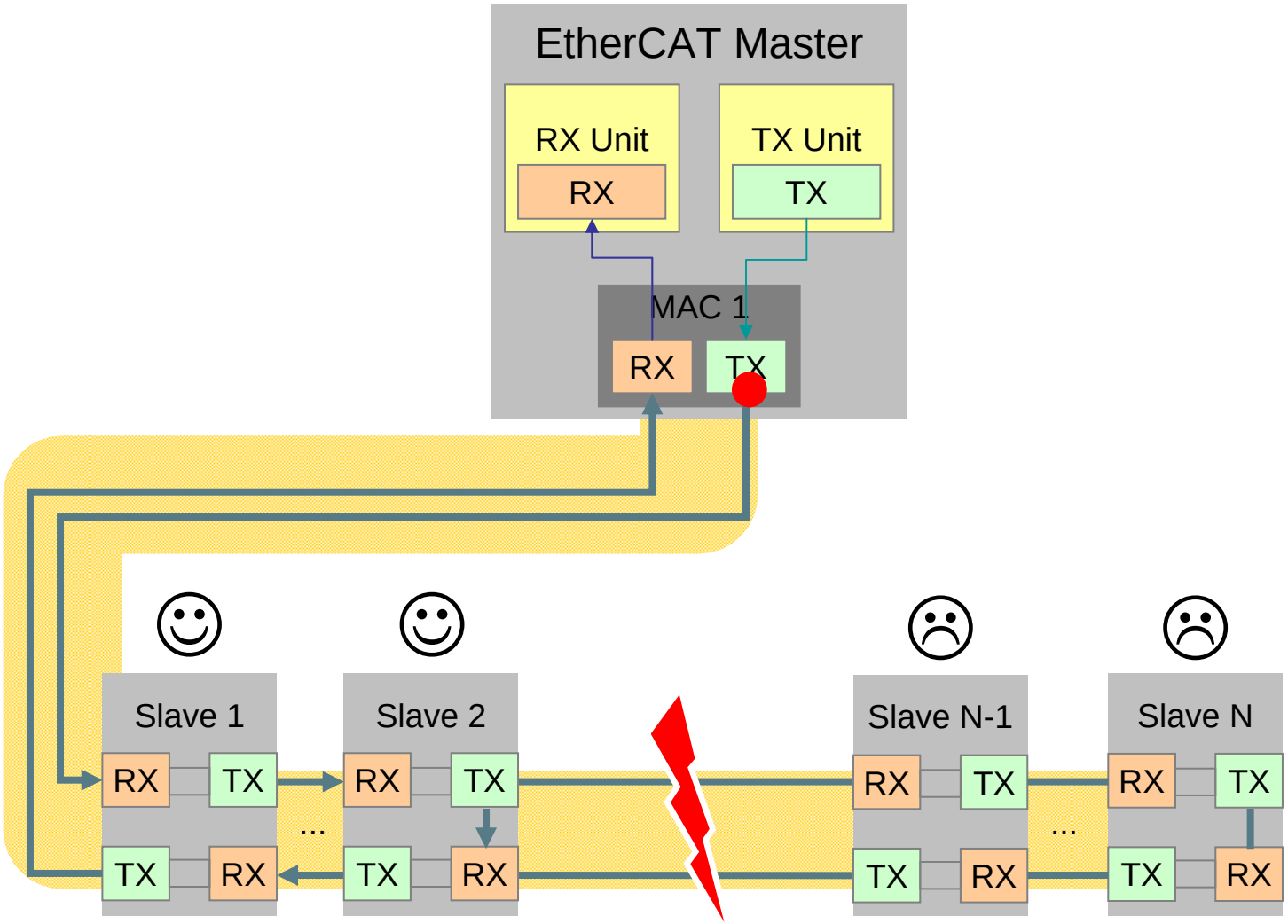

© EtherCAT Technology Group

Without Redundancy: Node or Cable Failure

EtherCAT Basics
Slave Structure
Device Model (ISO/OSI)
Physical Layer
Data Link Layer
- Frame Structure
- Addressing
- Commands
- Memory/Registers
- SyncManager
- FMMU
- Diagnosis

Distributed Clocks
Application Layer
- State Machine

Mailbox
- Mailbox Interface
- EoE Ethernet
- CoE CANopen
- FoE File Access
- SoE Servo Drive

ESI: Device Description
SII: Slave Information /IF
Device Profiles
- Modular Devices
- Drives

Configuration Tool
EtherCAT Master
Standards&Implementation

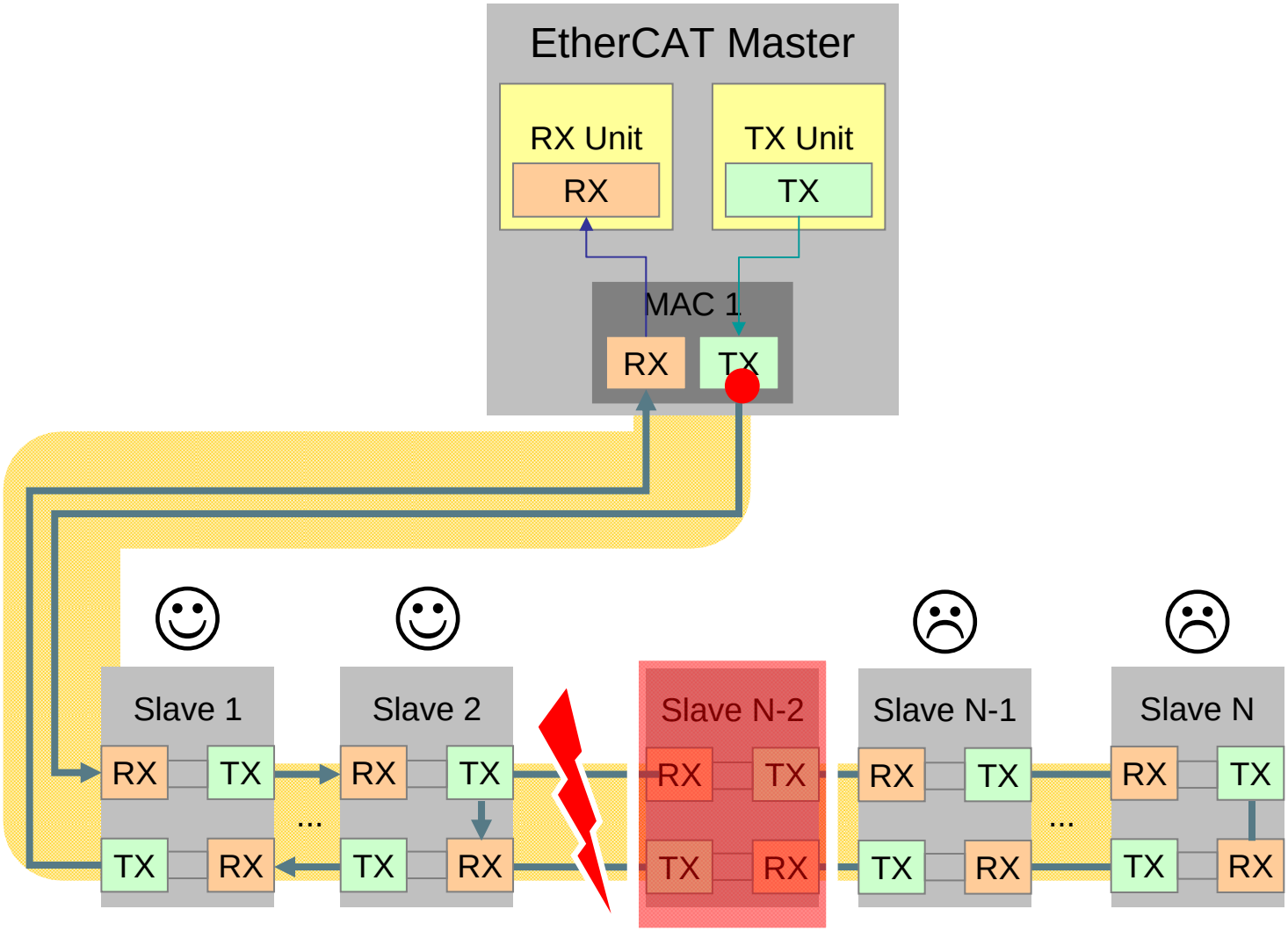

© EtherCAT Technology Group

With Redundancy: Normal Operation

EtherCAT Basics
Slave Structure
Device Model (ISO/OSI)
Physical Layer
Data Link Layer
- Frame Structure
- Addressing
- Commands
- Memory/Registers
- SyncManager
- FMMU
- Diagnosis

Distributed Clocks
Application Layer
- State Machine

Mailbox
- Mailbox Interface
- EoE Ethernet
- CoE CANopen
- FoE File Access
- SoE Servo Drive

ESI: Device Description
SII: Slave Information /IF
Device Profiles
- Modular Devices
- Drives

Configuration Tool
EtherCAT Master
Standards&Implementation

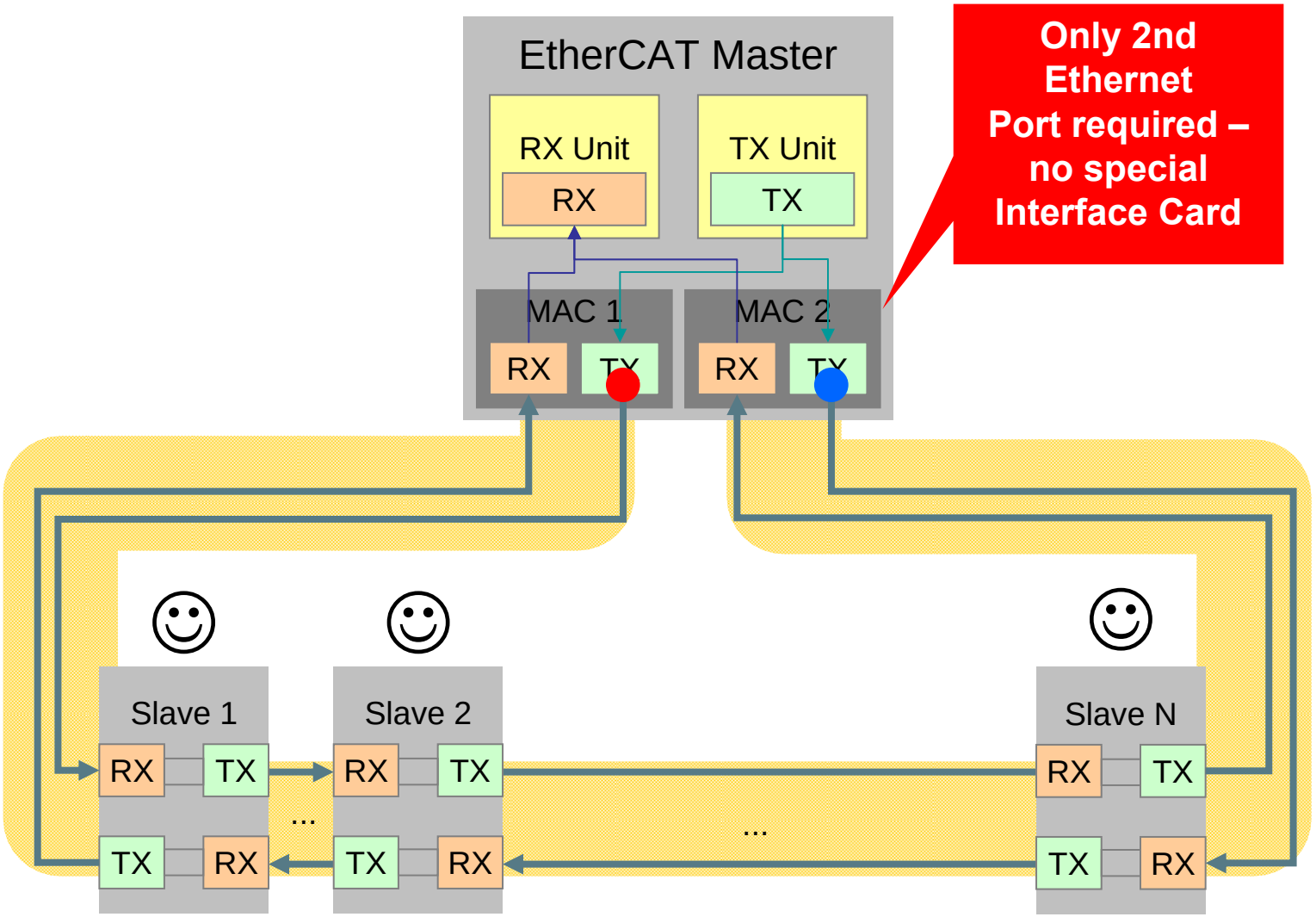

© EtherCAT Technology Group

With Redundancy: Normal Operation

EtherCAT Basics
Slave Structure
Device Model (ISO/OSI)
Physical Layer
Data Link Layer
- Frame Structure
- Addressing
- Commands
- Memory/Registers
- SyncManager
- FMMU
- Diagnosis

Distributed Clocks
Application Layer
- State Machine

Mailbox
- Mailbox Interface
- EoE Ethernet
- CoE CANopen
- FoE File Access
- SoE Servo Drive

ESI: Device Description
SII: Slave Information /IF
Device Profiles
- Modular Devices
- Drives

Configuration Tool
EtherCAT Master
Standards&Implementation

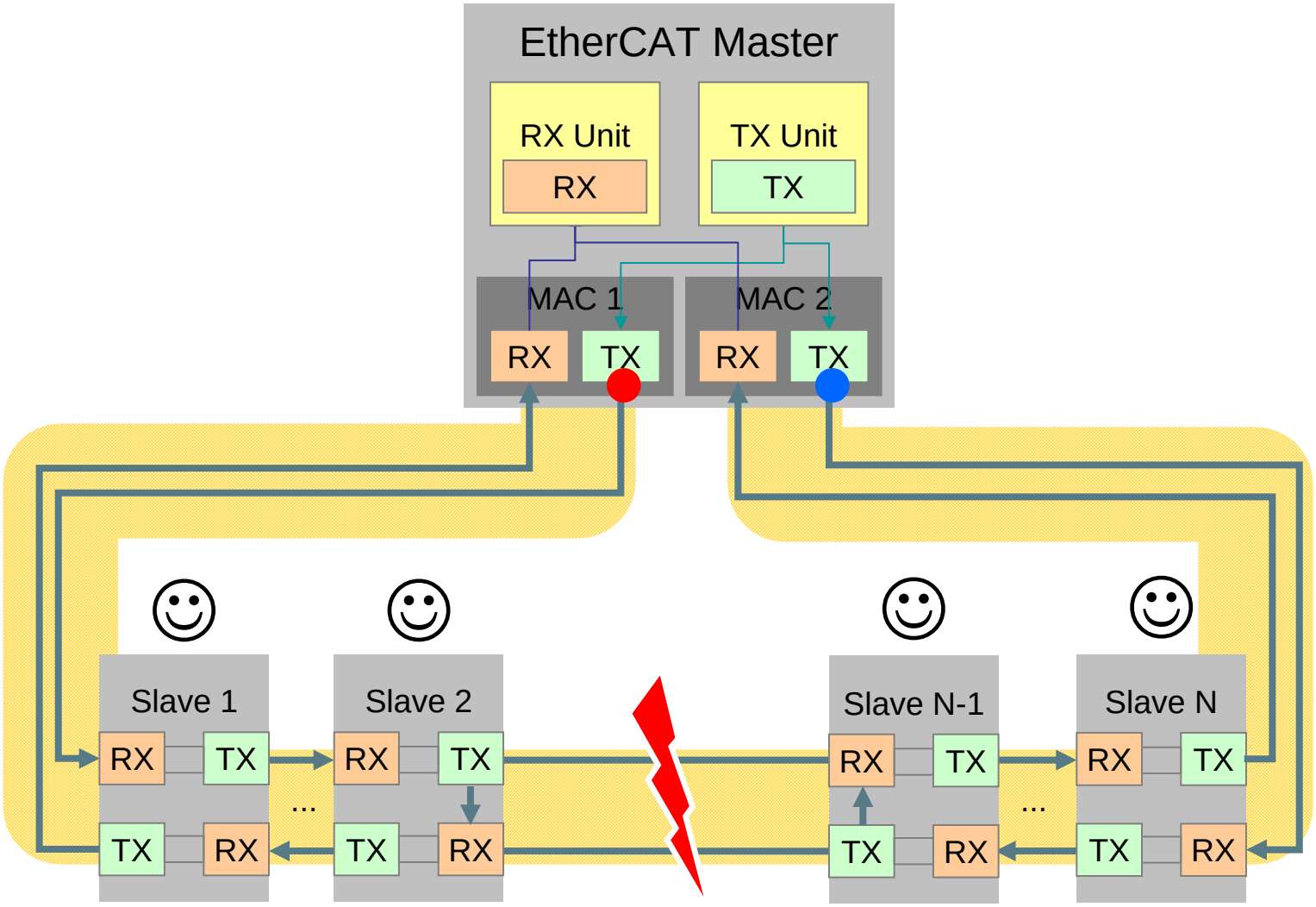

© EtherCAT Technology Group

With Redundancy: Node or Cable Failure

EtherCAT Basics
Slave Structure
Device Model (ISO/OSI)
Physical Layer
Data Link Layer
- Frame Structure
- Addressing
- Commands
- Memory/Registers
- SyncManager
- FMMU
- Diagnosis

Distributed Clocks
Application Layer
- State Machine

Mailbox
- Mailbox Interface
- EoE Ethernet
- CoE CANopen
- FoE File Access
- SoE Servo Drive

ESI: Device Description
SII: Slave Information /IF
Device Profiles
- Modular Devices
- Drives

Configuration Tool
EtherCAT Master
Standards&Implementation

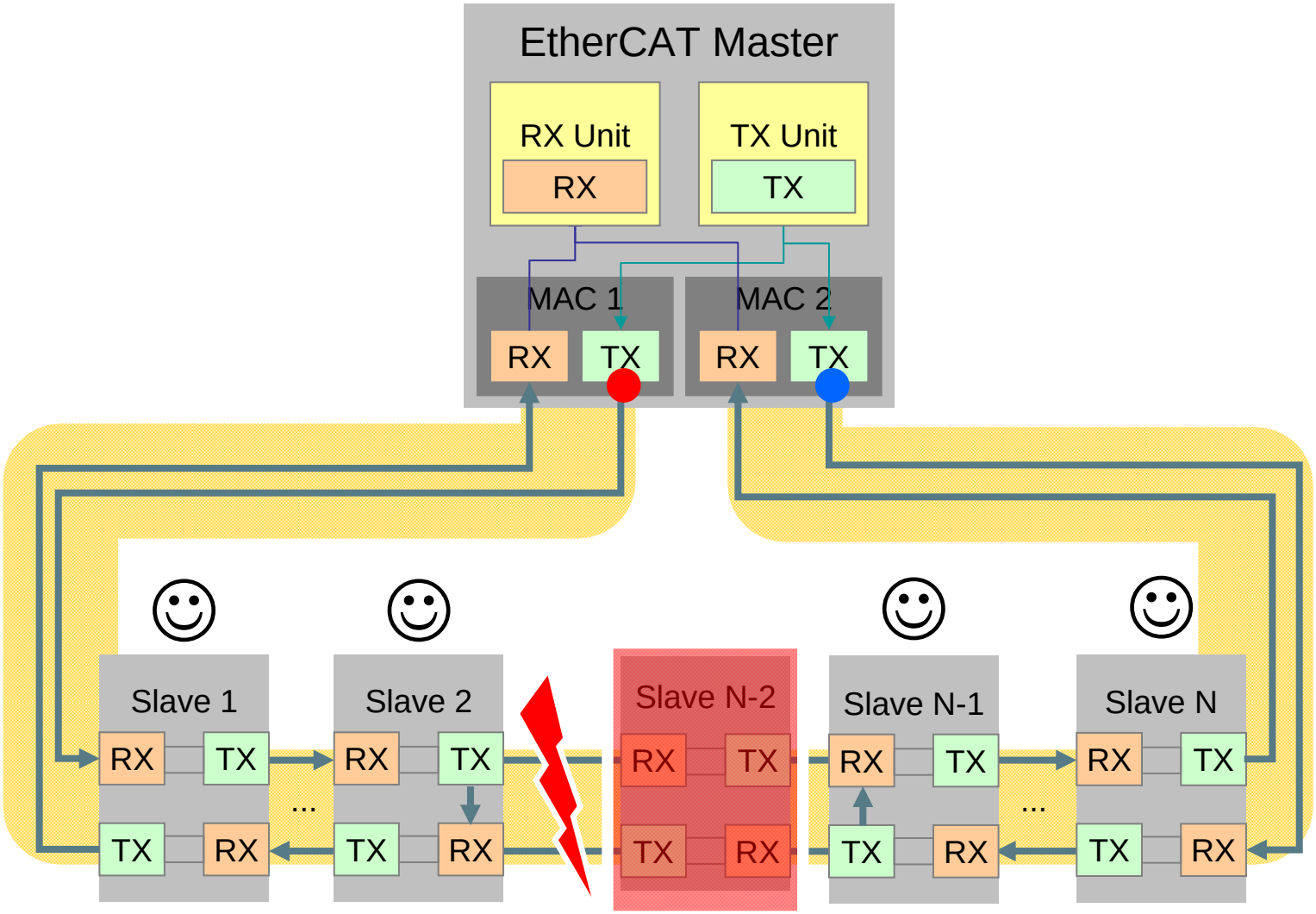

© EtherCAT Technology Group

Frame Processing within one node

EtherCAT Basics
Slave Structure
Device Model (ISO/OSI)
Physical Layer
Data Link Layer
- Frame Structure
- Addressing
- Commands
- Memory/Registers
- SyncManager
- FMMU
- Diagnosis

Distributed Clocks
Application Layer
- State Machine

Mailbox
- Mailbox Interface
- EoE Ethernet
- CoE CANopen
- FoE File Access
- SoE Servo Drive

ESI: Device Description
SII: Slave Information /IF
Device Profiles
- Modular Devices
- Drives

Configuration Tool
EtherCAT Master
Standards&Implementation

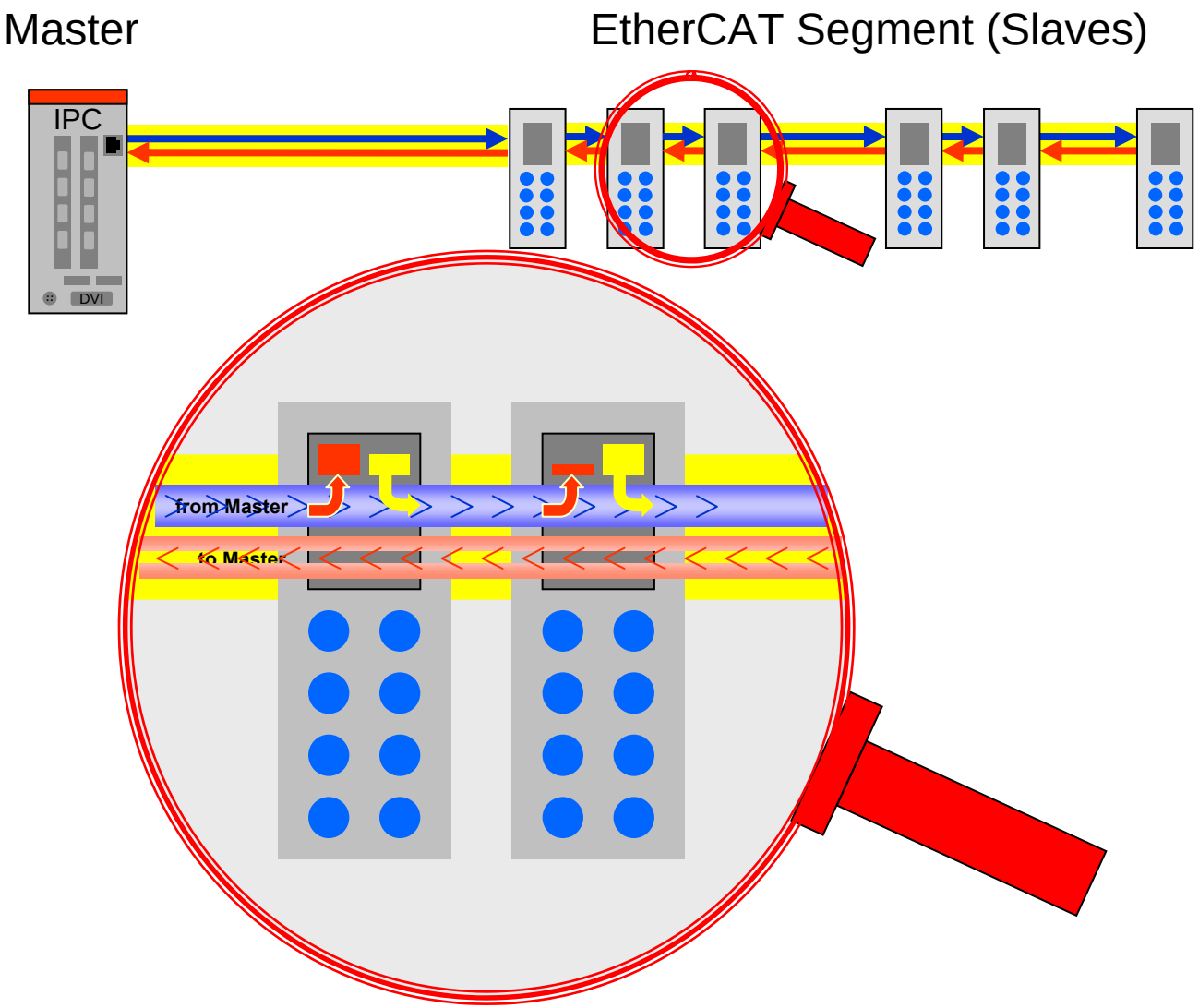

© EtherCAT Technology Group

EtherCAT Slave Structure

EtherCAT Basics
Slave Structure
Device Model (ISO/OSI)
Physical Layer
Data Link Layer
- Frame Structure
- Addressing
- Commands
- Memory/Registers
- SyncManager
- FMMU
- Diagnosis

Distributed Clocks
Application Layer
- State Machine

Mailbox
- Mailbox Interface
- EoE Ethernet
- CoE CANopen
- FoE File Access
- SoE Servo Drive

ESI: Device Description
SII: Slave Information /IF
Device Profiles
- Modular Devices
- Drives

Configuration Tool
EtherCAT Master
Standards&Implementation

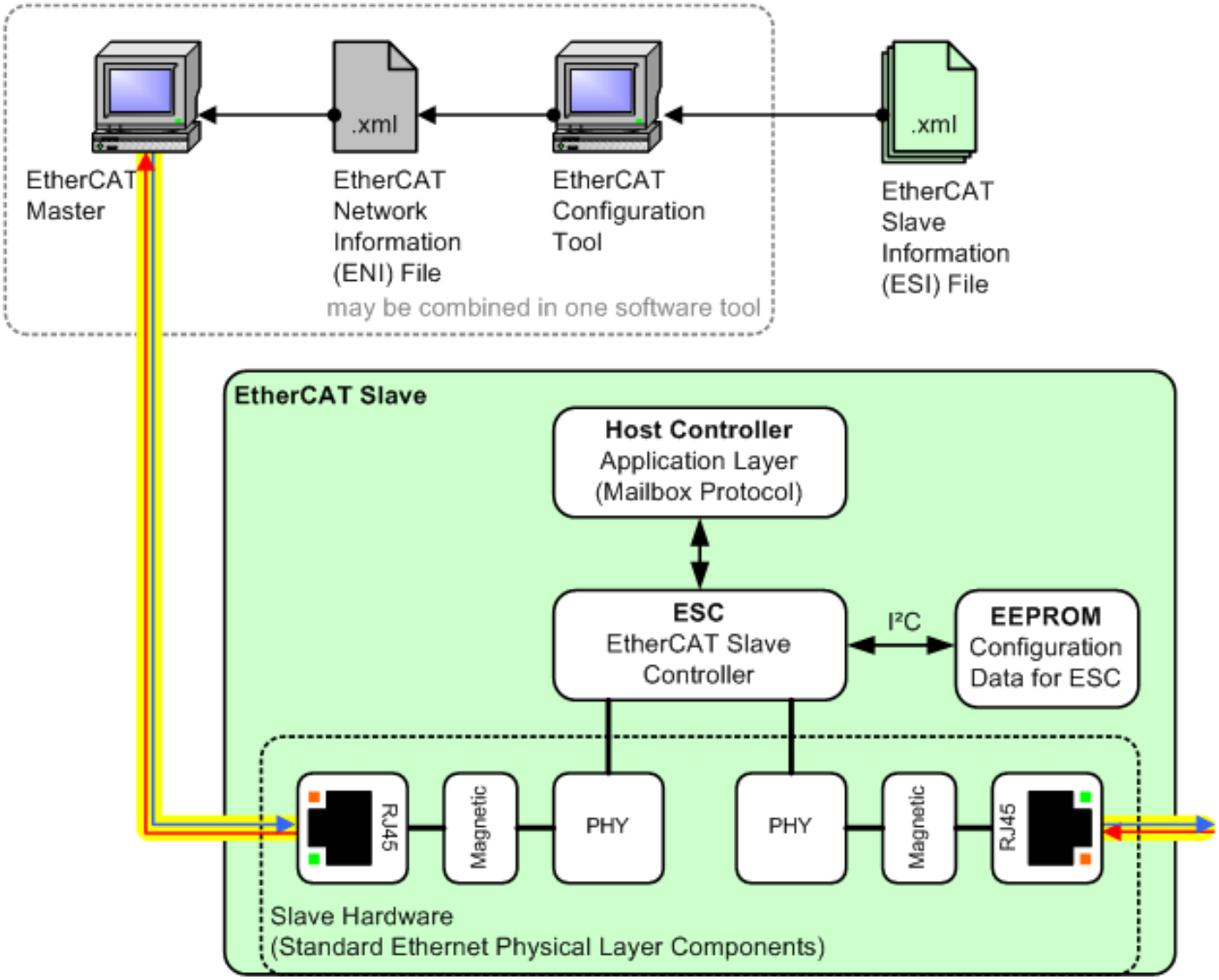

© EtherCAT Technology Group

EtherCAT Slave Evaluation Kit EL98xx (by Beckhoff)

EtherCAT Basics
Slave Structure
Device Model (ISO/OSI)
Physical Layer
Data Link Layer
- Frame Structure
- Addressing
- Commands
- Memory/Registers
- SyncManager
- FMMU
- Diagnosis

Distributed Clocks
Application Layer
- State Machine

Mailbox
- Mailbox Interface
- EoE Ethernet
- CoE CANopen
- FoE File Access
- SoE Servo Drive

ESI: Device Description
SII: Slave Information /IF
Device Profiles
- Modular Devices
- Drives

Configuration Tool
EtherCAT Master
Standards&Implementation

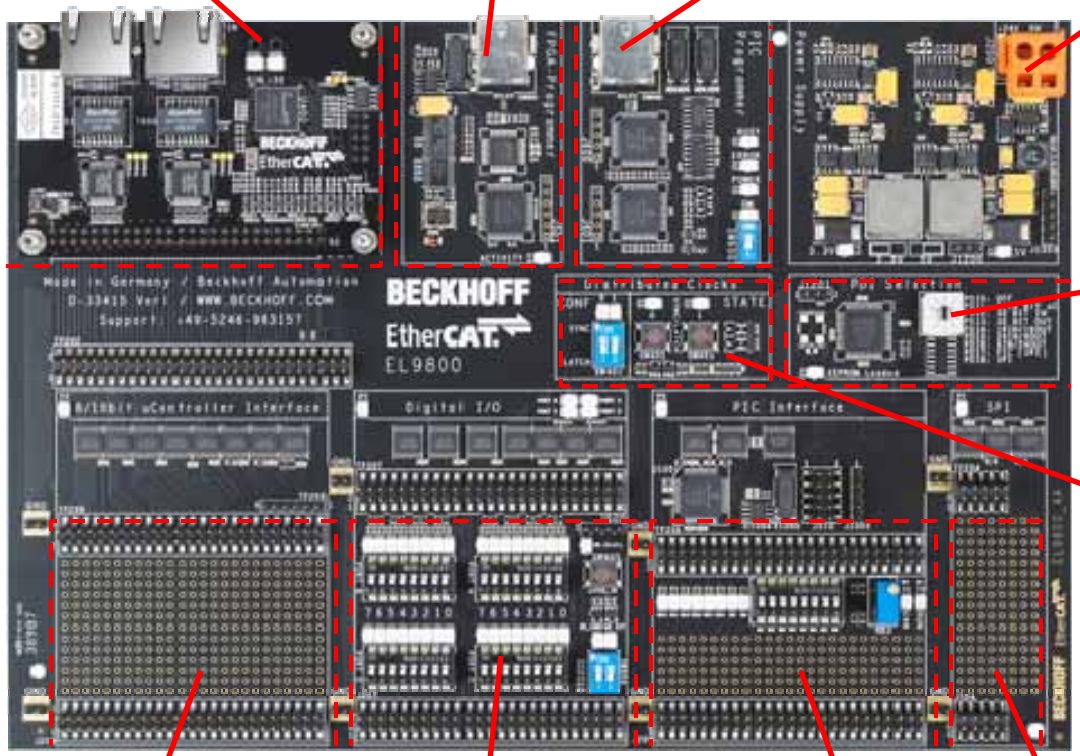

© EtherCAT Technology Group

EtherCAT Slave Controller Board

EtherCAT Basics
Slave Structure
Device Model (ISO/OSI)
Physical Layer
Data Link Layer
- Frame Structure
- Addressing
- Commands
- Memory/Registers
- SyncManager
- FMMU
- Diagnosis

Distributed Clocks
Application Layer
- State Machine

Mailbox
- Mailbox Interface
- EoE Ethernet
- CoE CANopen
- FoE File Access
- SoE Servo Drive

ESI: Device Description
SII: Slave Information /IF
Device Profiles
- Modular Devices
- Drives

Configuration Tool
EtherCAT Master
Standards&Implementation

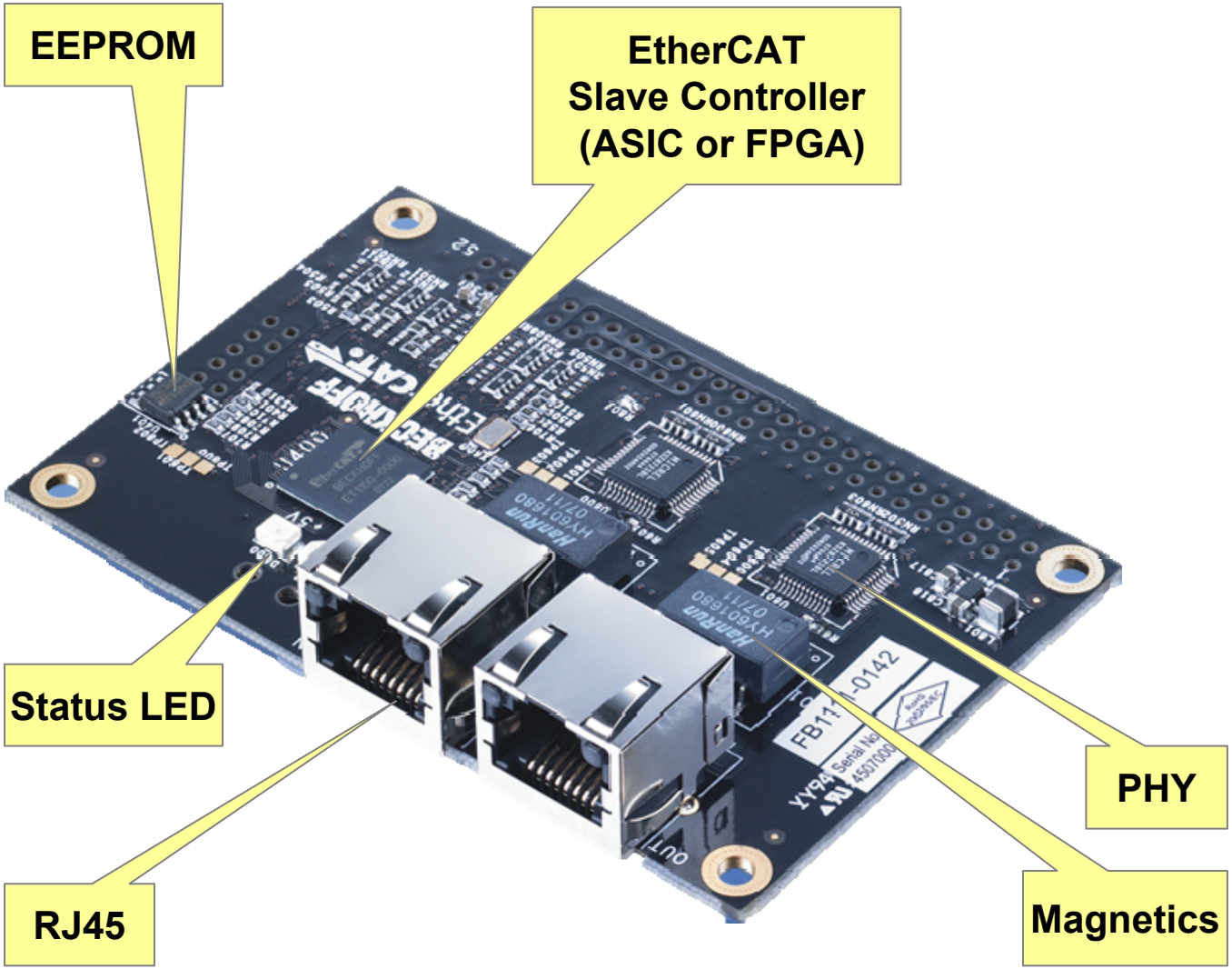

* Post stamp design, not cost and space optimized

© EtherCAT Technology Group

ISO/OSI Layer Model

EtherCAT Basics
Slave Structure
Device Model (ISO/OSI)
Physical Layer
Data Link Layer
Frame Structure
Addressing
Commands
Memory/Registers
SyncManager
FMMU
Diagnosis
Distributed Clocks
Application Layer
State Machine
Mailbox
Mailbox Interface
EoE Ethernet
CoE CANopen
FoE File Access
SoE Servo Drive
ESI: Device Description
SII: Slave Information /IF
Device Profiles
Modular Devices
Drives
Configuration Tool
EtherCAT Master
Standards&Implementation

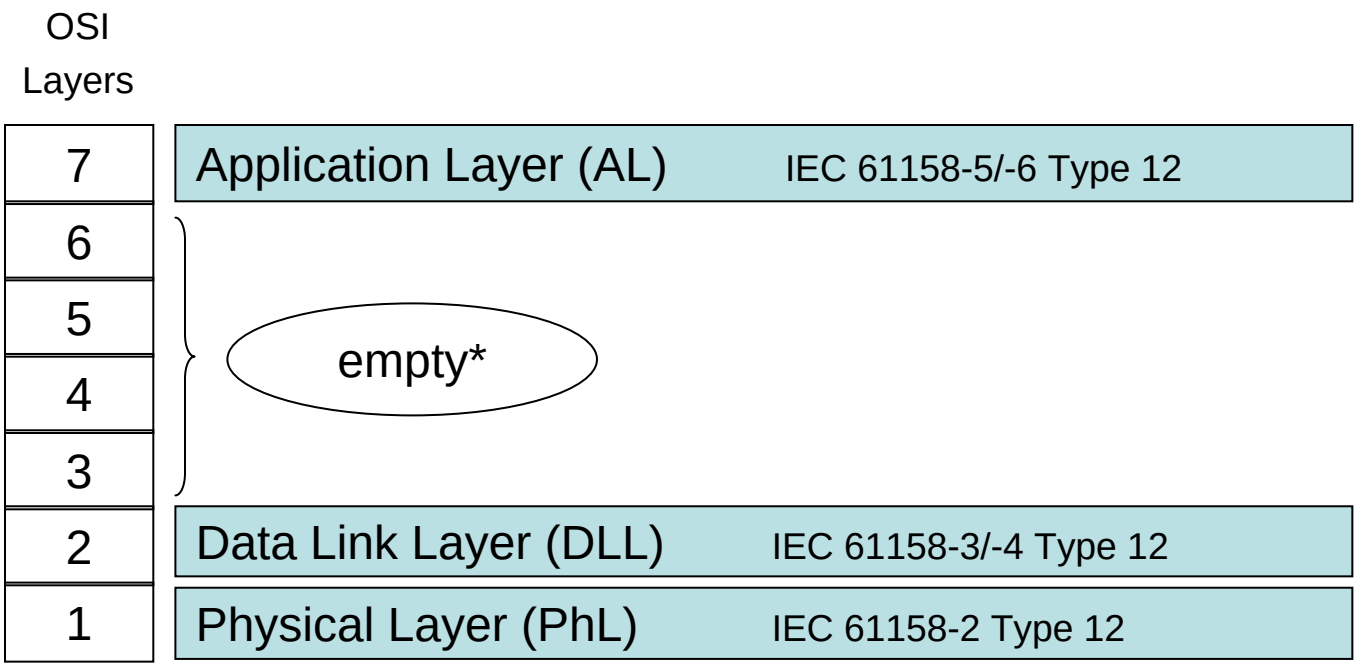

*** „empty“ means that the layer behavior exists, but is not shown explicitly**

© EtherCAT Technology Group

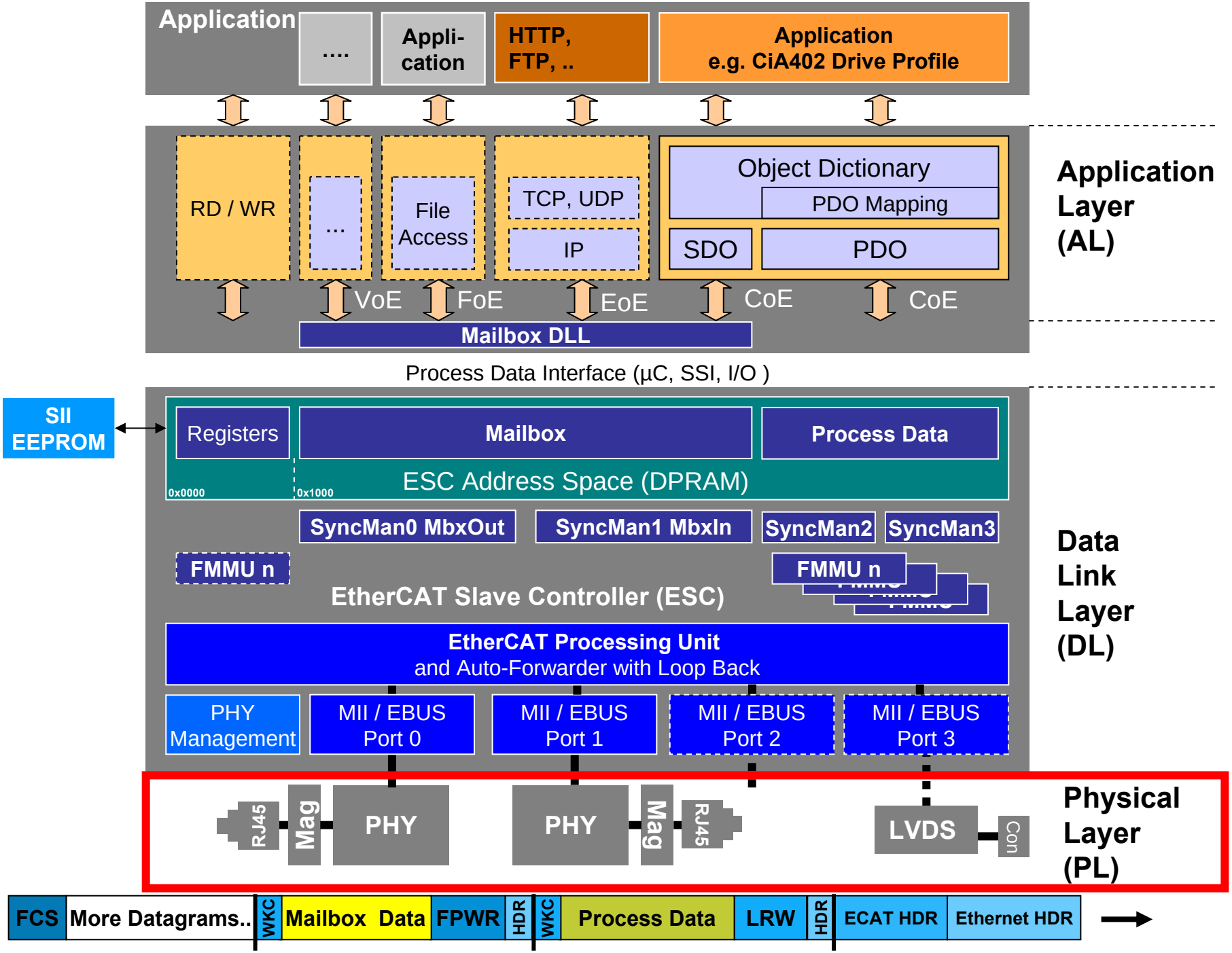
Application
....
Appli-
cation
HTTP,
FTP, ..
Application
e.g. CiA402 Drive Profile
RD / WR
...
File
Access
TCP, UDP
IP
Object Dictionary
PDO Mapping
SDO
PDO
VoE
FoE
EoE
CoE
CoE
Mailbox DLL
Application
Layer
(AL)
Process Data Interface (µC, SSI, I/O)
SII
EEPROM
Registers
Mailbox
Process Data
0x0000
0x1000
ESC Address Space (DPRAM)
SyncMan0 MbxOut
SyncMan1 MbxIn
SyncMan2
SyncMan3
FMMU n
FMMU n
EtherCAT Slave Controller (ESC)
EtherCAT Processing Unit
and Auto-Forwarder with Loop Back
PHY
Management
MII / EBUS
Port 0
MII / EBUS
Port 1
MII / EBUS
Port 2
MII / EBUS
Port 3
Data
Link
Layer
(DL)
RJ45
Mag
PHY
PHY
Mag
RJ45
LVDS
Con
Physical
Layer
(PL)
FCS
More Datagrams..
WKC
Mailbox Data
FPWR
HDR
WKC
Process Data
LRW
HDR
ECAT HDR
Ethernet HDR

EtherCAT Physical Layer

EtherCAT Basics
Slave Structure
Device Model (ISO/OSI)
Physical Layer
Data Link Layer
- Frame Structure
- Addressing
- Commands
- Memory/Registers
- SyncManager
- FMMU
- Diagnosis

Distributed Clocks
Application Layer
- State Machine

Mailbox
- Mailbox Interface
- EoE Ethernet
- CoE CANopen
- FoE File Access
- SoE Servo Drive

ESI: Device Description
SII: Slave Information /IF
Device Profiles
- Modular Devices
- Drives

Configuration Tool
EtherCAT Master
Standards&Implementation

- Ethernet Signal Variants of EtherCAT:
  - 100BASE-TX (up to 100 m between 2 nodes)
  - 100BASE-FX (up to 2 km between 2 nodes)
  - LVDS (for modular devices)

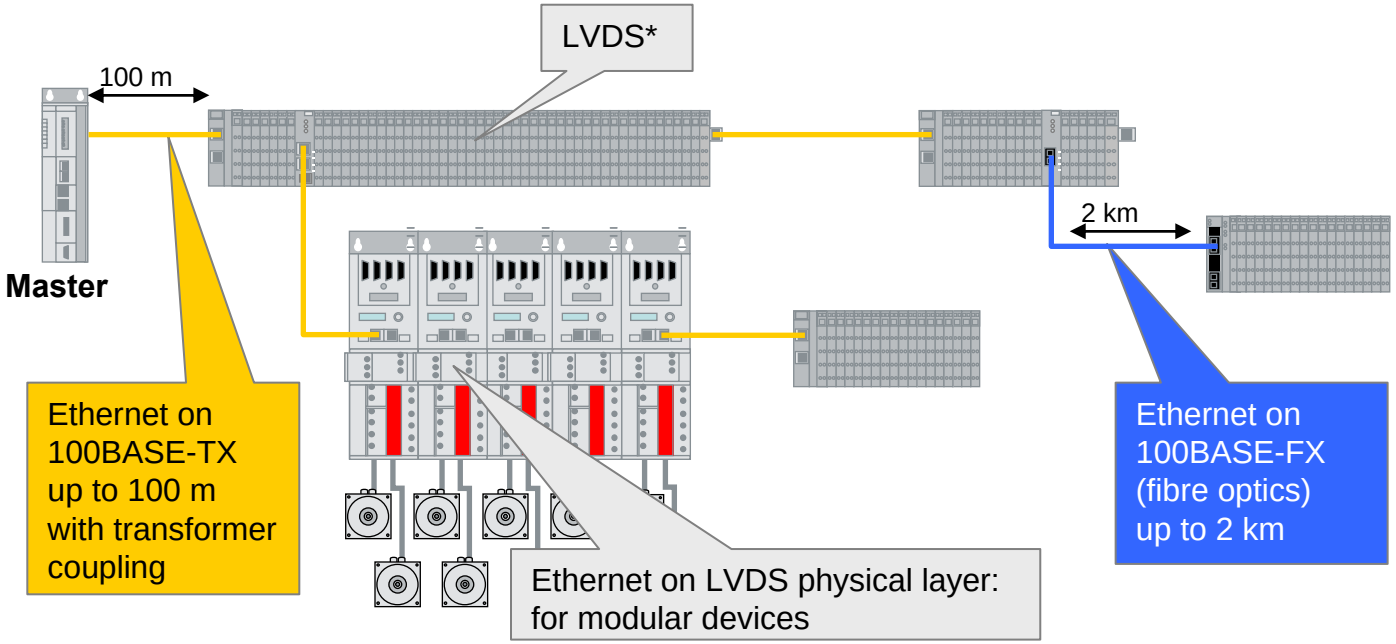

- Any number of physical layer changes allowed

© EtherCAT Technology Group

Physical Layer

EtherCAT Basics
Slave Structure
Device Model (ISO/OSI)
Physical Layer
Data Link Layer
Frame Structure
Addressing
Commands
Memory/Registers
SyncManager
FMMU
Diagnosis
Distributed Clocks
Application Layer
State Machine
Mailbox
Mailbox Interface
EoE Ethernet
CoE CANopen
FoE File Access
SoE Servo Drive
ESI: Device Description
SII: Slave Information /IF
Device Profiles
Modular Devices
Drives
Configuration Tool
EtherCAT Master
Standards&Implementation

- 100 BASE-TX
  - Most popular physical layer for Fast Ethernet
  - Shielded twisted pair (STP) with 2 pairs of wires
  - Cable categories CAT5, 6, 7 can be used
  - RJ45 connector standard, M12 connector for IP67
  - PHY Support for auto negotiation and auto crossover recommended
- 100 BASE-FX
  - All media options possible
  - Simple solution for TX-to-FX converter
- E-BUS
  - Interface for low cost backplane applications
  - Widely used LVDS (Low Voltage Differential Signaling) adopted
  - Use Manchester Bit Coding
  - LVDS: Low Voltage Differential Signaling according to ANSI/TIA/EIA-644, also used in IEEE 802.3ae (10Gigabit Ethernet)

© EtherCAT Technology Group

Frame Processing
Auto Forwarder and Loop Back

EtherCAT Basics
Slave Structure
Device Model (ISO/OSI)
Physical Layer
Data Link Layer
- Frame Structure
- Addressing
- Commands
- Memory/Registers
- SyncManager
- FMMU
- Diagnosis

Distributed Clocks
Application Layer
- State Machine

Mailbox
- Mailbox Interface
- EoE Ethernet
- CoE CANopen
- FoE File Access
- SoE Servo Drive

ESI: Device Description
SII: Slave Information /IF
Device Profiles
- Modular Devices
- Drives

Configuration Tool
EtherCAT Master
Standards&Implementation

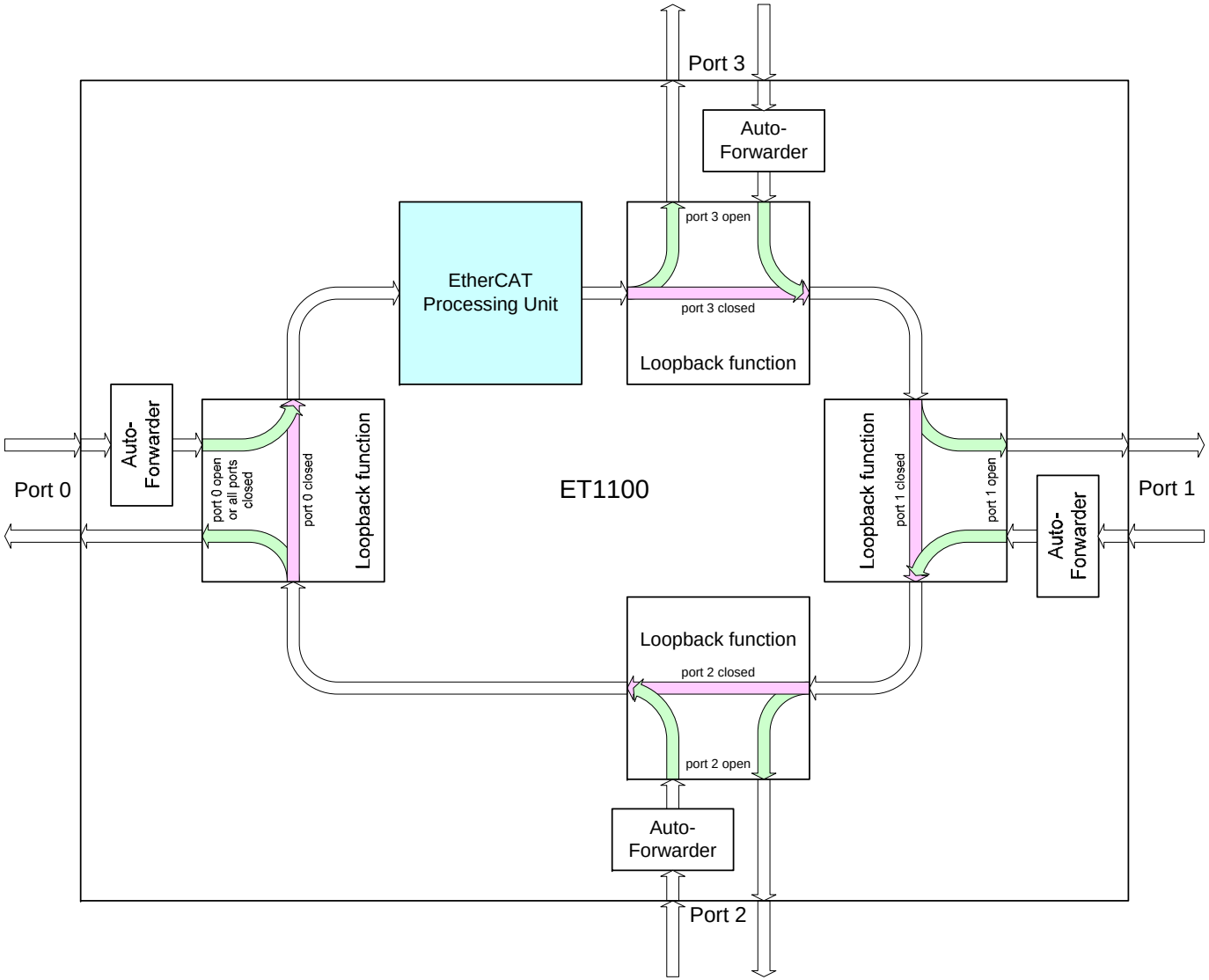

© EtherCAT Technology Group

Frame Processing Order on the System

EtherCAT Basics
Slave Structure
Device Model (ISO/OSI)
Physical Layer
Data Link Layer
- Frame Structure
- Addressing
- Commands
- Memory/Registers
- SyncManager
- FMMU
- Diagnosis

Distributed Clocks
Application Layer
- State Machine

Mailbox
- Mailbox Interface
- EoE Ethernet
- CoE CANopen
- FoE File Access
- SoE Servo Drive

ESI: Device Description
SII: Slave Information /IF
Device Profiles
- Modular Devices
- Drives

Configuration Tool
EtherCAT Master
Standards&Implementation

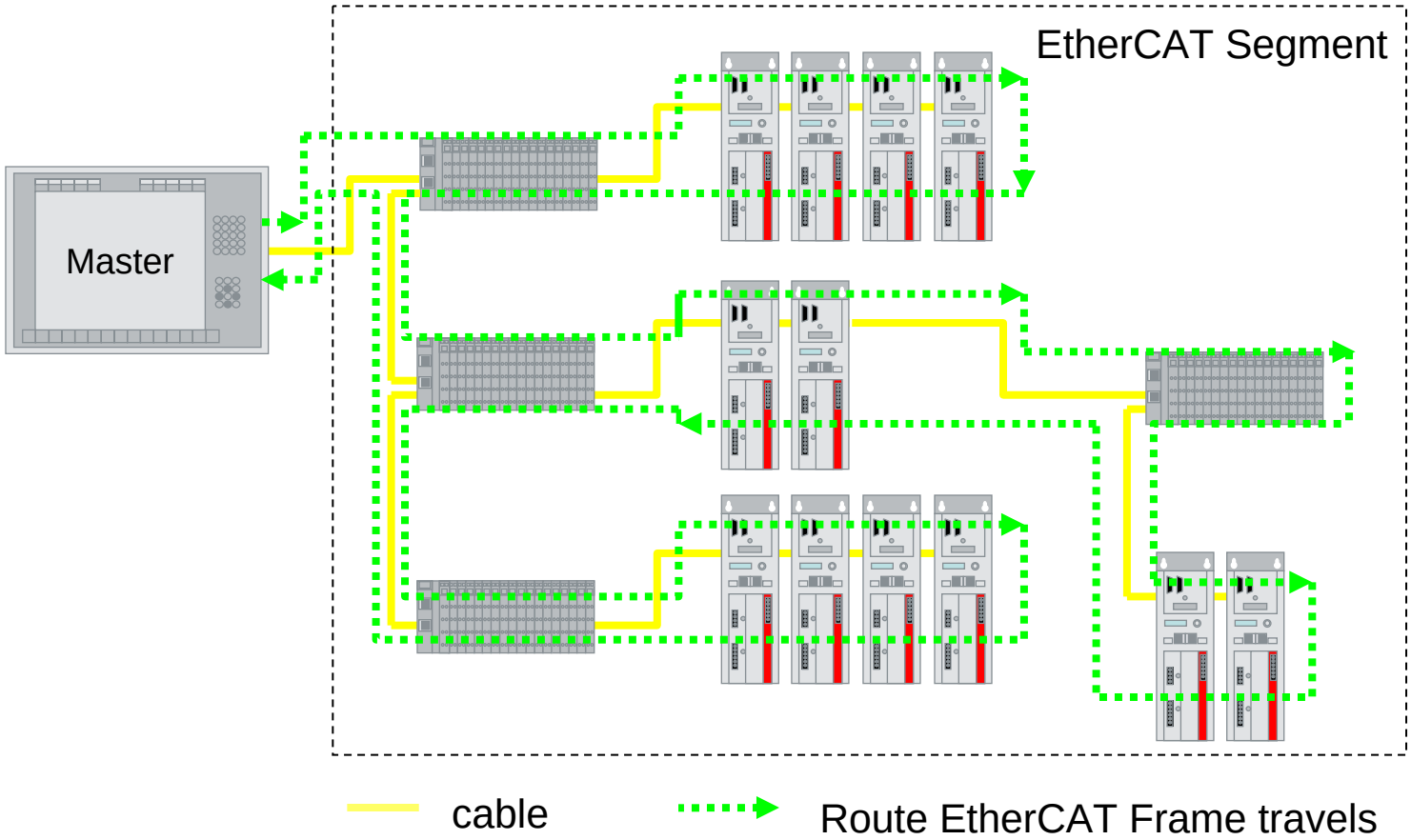

© EtherCAT Technology Group

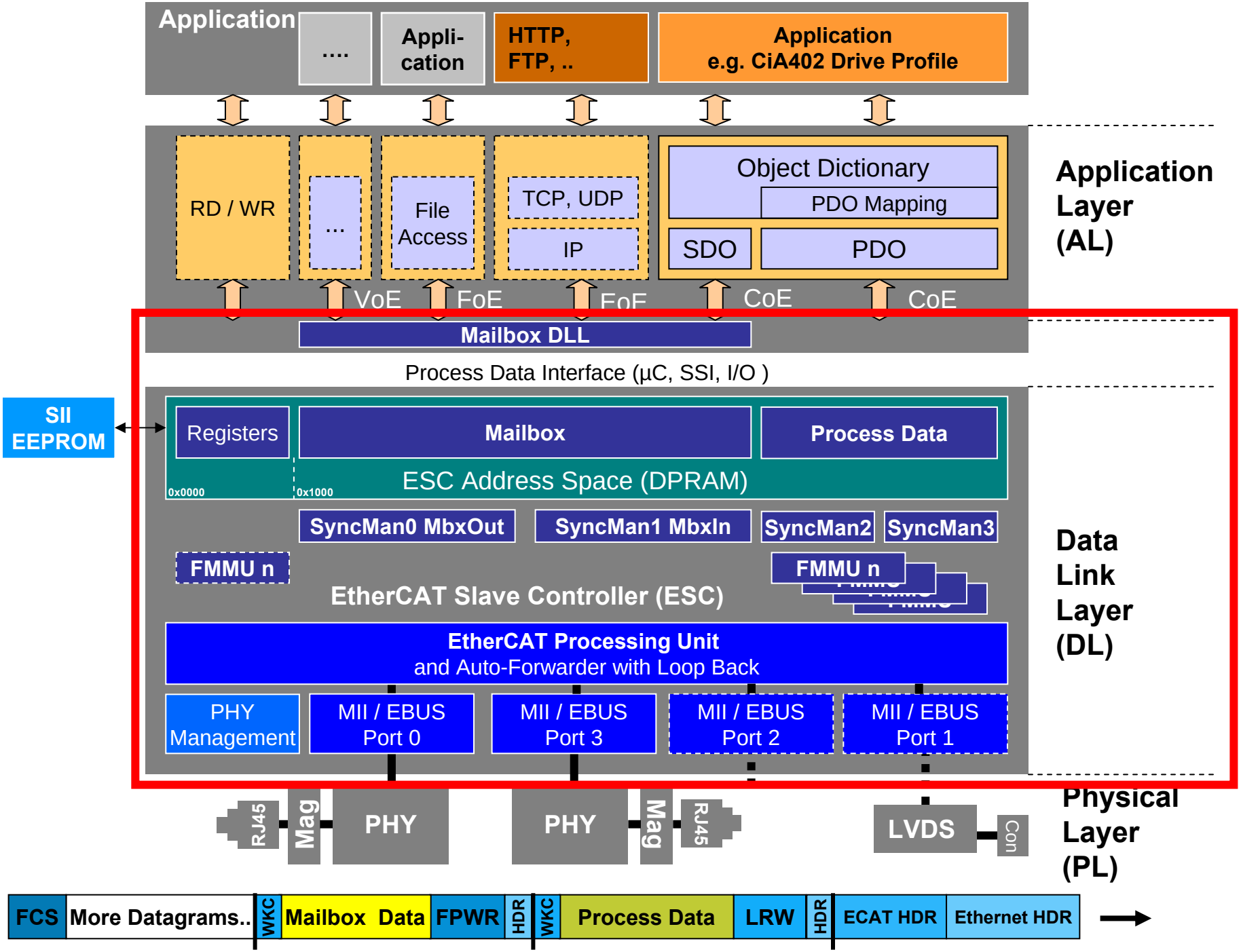
Application
....
Appli-
cation
HTTP,
FTP, ..
Application
e.g. CiA402 Drive Profile
RD / WR
...
File
Access
TCP, UDP
IP
Object Dictionary
PDO Mapping
SDO
PDO
Application
Layer
(AL)
VoE
FoE
EoE
CoE
CoE
Mailbox DLL
Process Data Interface (µC, SSI, I/O)
SII
EEPROM
Registers
Mailbox
Process Data
0x0000
0x1000
ESC Address Space (DPRAM)
SyncMan0 MbxOut
SyncMan1 MbxIn
SyncMan2
SyncMan3
FMMU n
FMMU n
EtherCAT Slave Controller (ESC)
EtherCAT Processing Unit
and Auto-Forwarder with Loop Back
PHY
Management
MII / EBUS
Port 0
MII / EBUS
Port 3
MII / EBUS
Port 2
MII / EBUS
Port 1
Data
Link
Layer
(DL)
RJ45
Mag
PHY
PHY
Mag
RJ45
LVDS
Con
Physical
Layer
(PL)
FCS
More Datagrams..
WKC
Mailbox Data
FPWR
HDR
WKC
Process Data
LRW
HDR
ECAT HDR
Ethernet HDR

Purpose of Data Link Layer

EtherCAT Basics
Slave Structure
Device Model (ISO/OSI)
Physical Layer
Data Link Layer
Frame Structure
Addressing
Commands
Memory/Registers
SyncManager
FMMU
Diagnosis
Distributed Clocks
Application Layer
State Machine
Mailbox
Mailbox Interface
EoE Ethernet
CoE CANopen
FoE File Access
SoE Servo Drive
ESI: Device Description
SII: Slave Information /IF
Device Profiles
Modular Devices
Drives
Configuration Tool
EtherCAT Master
Standards&Implementation

- Data Link Layer links Physical and Application Layer
- Data Link Layer takes care of the underlying communication infrastructure
  - Link Control
  - Access to Transceivers (PHY)
  - Addressing
  - Slave Controller configuration
  - EEPROM access
  - SyncManager configuration and management
  - FMMU configuration and management
  - Process Data Interface configuration
  - Distributed Clock
  - Set Up AL State Machine interactions

© EtherCAT Technology Group

Data Link Layer – Overview

EtherCAT Basics
Slave Structure
Device Model (ISO/OSI)
Physical Layer
Data Link Layer
Frame Structure
Addressing
Commands
Memory/Registers
SyncManager
FMMU
Diagnosis
Distributed Clocks
Application Layer
State Machine
Mailbox
Mailbox Interface
EoE Ethernet
CoE CANopen
FoE File Access
SoE Servo Drive
ESI: Device Description
SII: Slave Information /IF
Device Profiles
Modular Devices
Drives
Configuration Tool
EtherCAT Master
Standards&Implementation

- Standard IEEE 802.3 Ethernet Frame
  - No special requirements for the master
  - Use of standard Ethernet infrastructure
- IEEE Registered EtherType: 88A4h
  - Optimized frame overhead
  - IP stack not required
  - Simple master implementation
- Additionally over UDP
  (IANA registered Port 88A4h)
  - EtherCAT communication over the Internet possible
  - Using of standard sockets
- Frame processing at Slave side
  - EtherCAT Slave Controller processes frame in hardware
- Communication Performance independent from processor power
  - no time critical reaction at slave side in software

© EtherCAT Technology Group

Ethernet / EtherCAT Frame Structure

EtherCAT Basics
Slave Structure
Device Model (ISO/OSI)
Physical Layer
Data Link Layer
- Frame Structure
- Addressing
- Commands
- Memory/Registers
- SyncManager
- FMMU
- Diagnosis

Distributed Clocks
Application Layer
- State Machine

Mailbox
- Mailbox Interface
- EoE Ethernet
- CoE CANopen
- FoE File Access
- SoE Servo Drive

ESI: Device Description
SII: Slave Information /IF
Device Profiles
- Modular Devices
- Drives

Configuration Tool
EtherCAT Master
Standards&Implementation

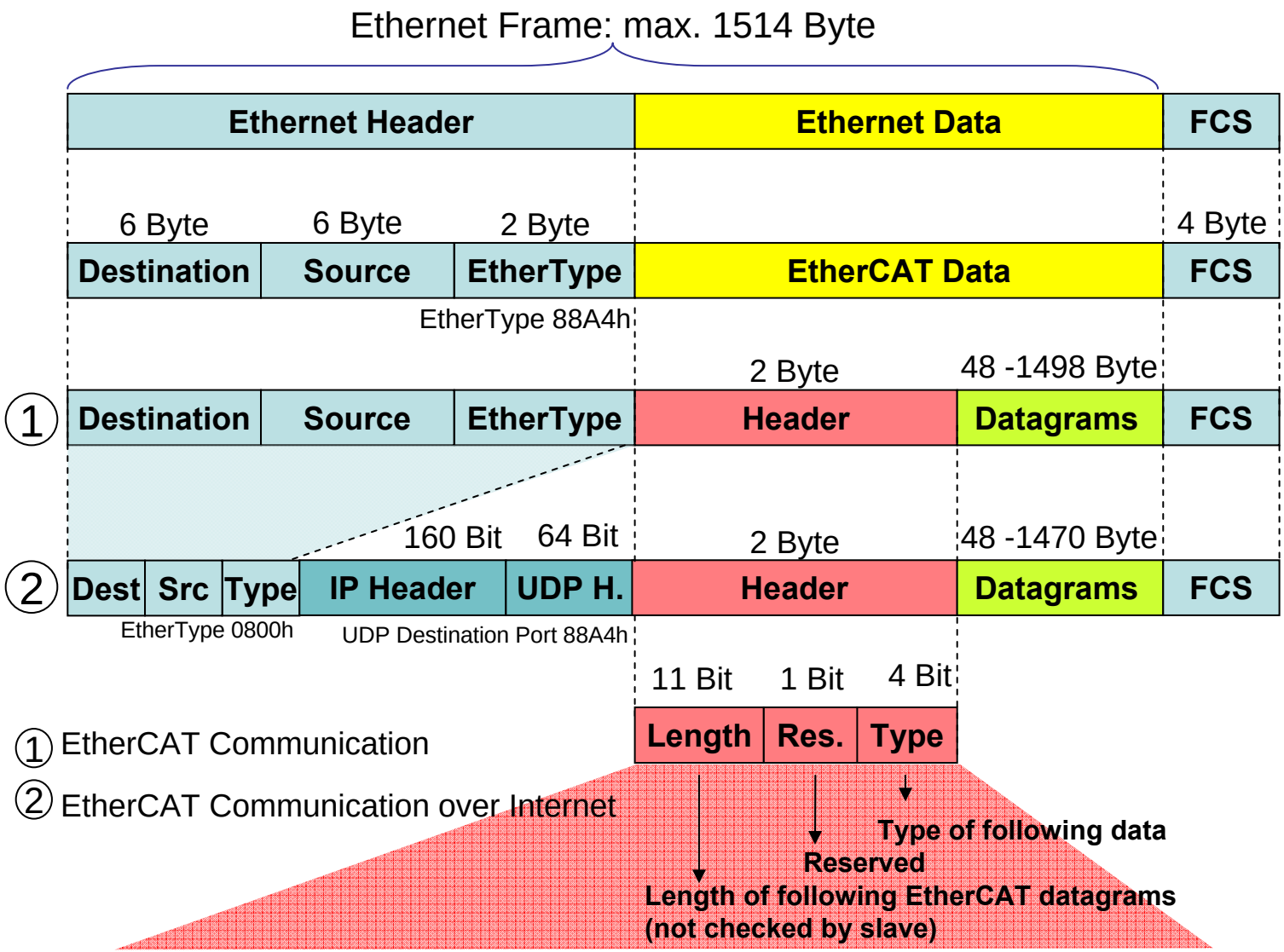

© EtherCAT Technology Group

EtherCAT Frame Header

EtherCAT Basics
Slave Structure
Device Model (ISO/OSI)
Physical Layer
Data Link Layer
Frame Structure
Addressing
Commands
Memory/Registers
SyncManager
FMMU
Diagnosis
Distributed Clocks
Application Layer
State Machine
Mailbox
Mailbox Interface
EoE Ethernet
CoE CANopen
FoE File Access
SoE Servo Drive
ESI: Device Description
SII: Slave Information /IF
Device Profiles
Modular Devices
Drives
Configuration Tool
EtherCAT Master
Standards&Implementation

	11 Bit	1 Bit	4 Bit
0	**Length**	11 **Res.**	12 **Type** 15

Type	Meaning
0:	Reserved
1:	EtherCAT Device Communication the <u>only</u> type that is evaluated by the ESC!
2,3:	Reserved
4:	EAP Process Data Communication
5:	EAP Mailbox Communication
6-15:	Reserved for future use

© EtherCAT Technology Group

EtherCAT Datagram Header Address

EtherCAT Basics
Slave Structure
Device Model (ISO/OSI)
Physical Layer
Data Link Layer
- Frame Structure
- Addressing
- Commands
- Memory/Registers
- SyncManager
- FMMU
- Diagnosis

Distributed Clocks
Application Layer
- State Machine

Mailbox
- Mailbox Interface
- EoE Ethernet
- CoE CANopen
- FoE File Access
- SoE Servo Drive

ESI: Device Description
SII: Slave Information /IF
Device Profiles
- Modular Devices
- Drives

Configuration Tool
EtherCAT Master
Standards&Implementation

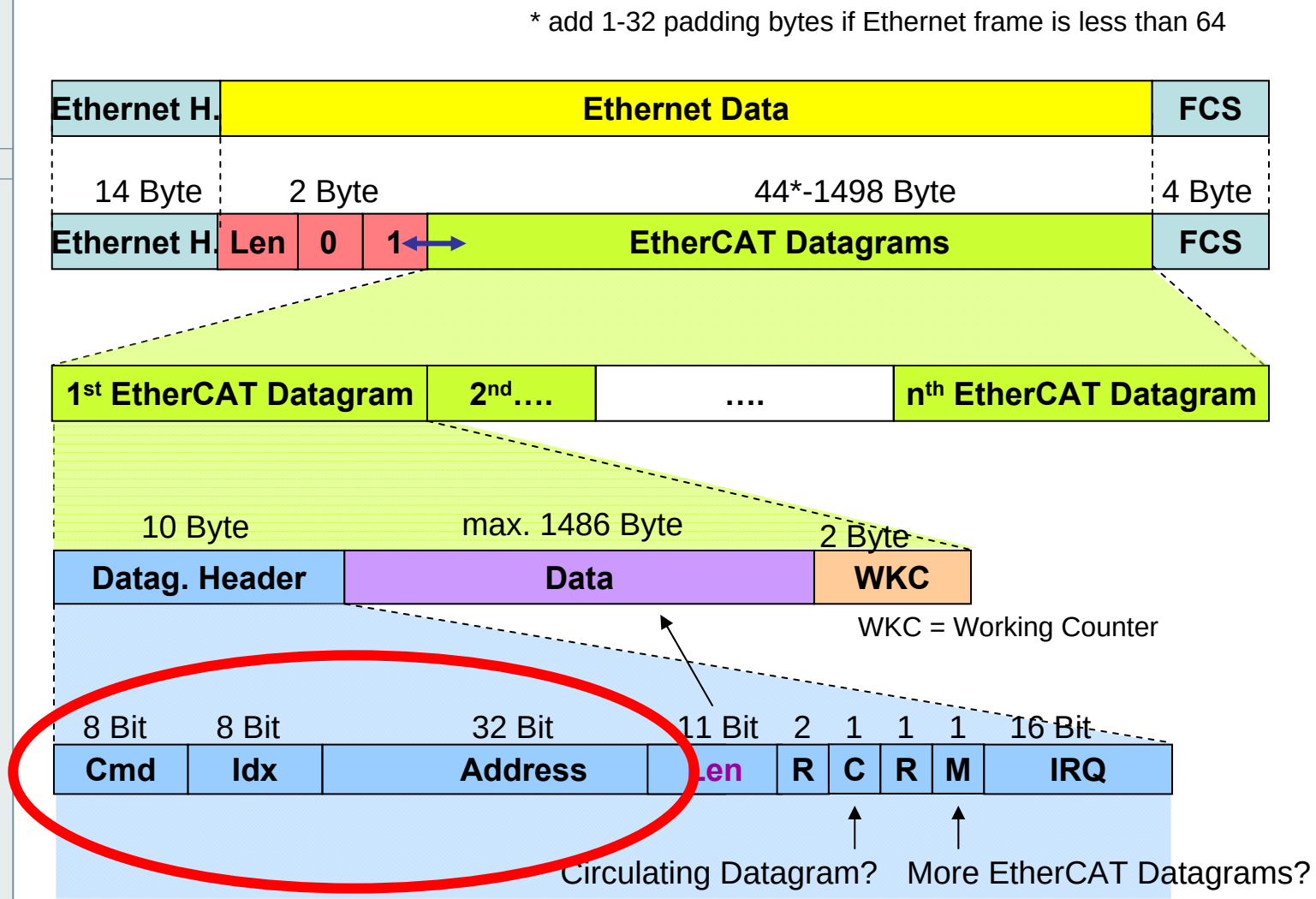

© EtherCAT Technology Group

EtherCAT Addressing Overview

EtherCAT Basics
Slave Structure
Device Model (ISO/OSI)
Physical Layer
Data Link Layer
Frame Structure
Addressing
Commands
Memory/Registers
SyncManager
FMMU
Diagnosis
Distributed Clocks
Application Layer
State Machine
Mailbox
Mailbox Interface
EoE Ethernet
CoE CANopen
FoE File Access
SoE Servo Drive
ESI: Device Description
SII: Slave Information /IF
Device Profiles
Modular Devices
Drives
Configuration Tool
EtherCAT Master
Standards&Implementation

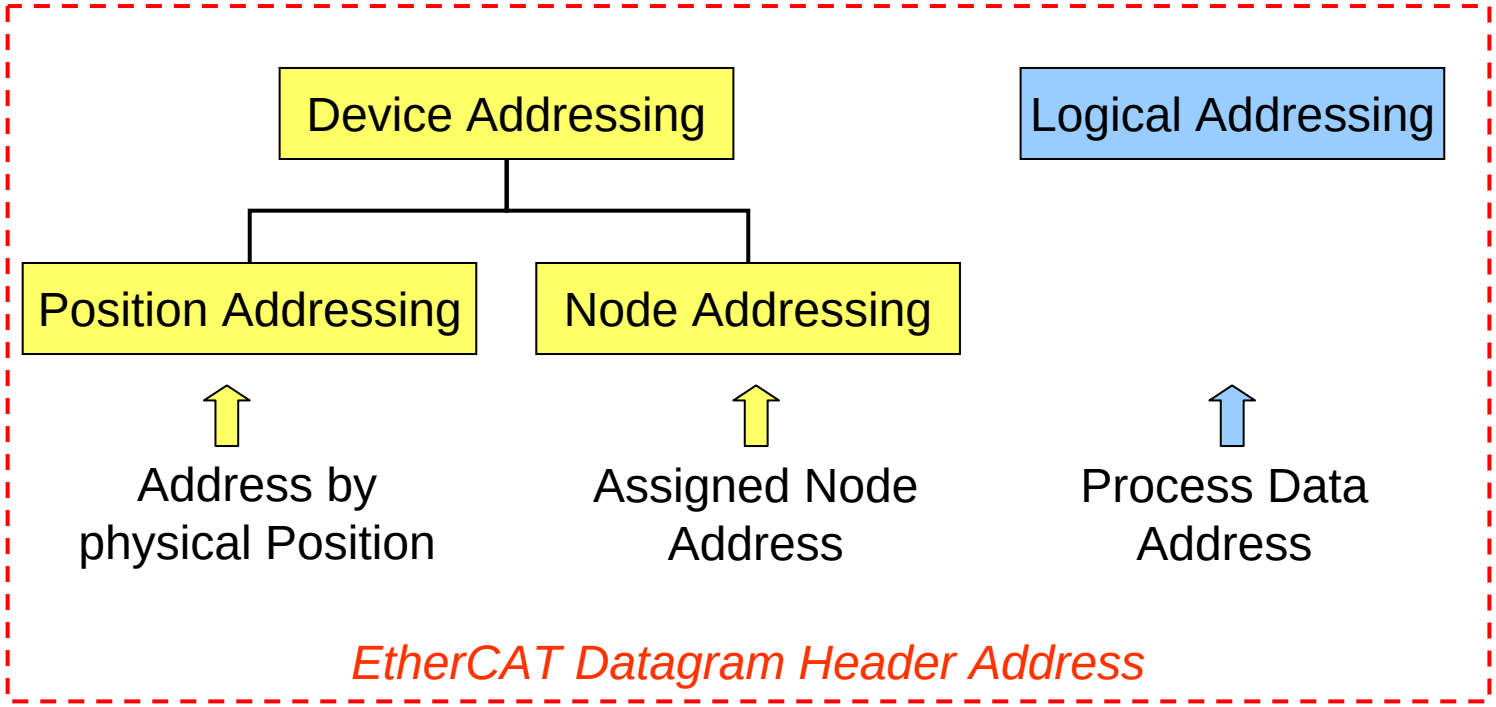

© EtherCAT Technology Group

Address Field

EtherCAT Basics
Slave Structure
Device Model (ISO/OSI)
Physical Layer
Data Link Layer
Frame Structure
Addressing
Commands
Memory/Registers
SyncManager
FMMU
Diagnosis
Distributed Clocks
Application Layer
State Machine
Mailbox
Mailbox Interface
EoE Ethernet
CoE CANopen
FoE File Access
SoE Servo Drive
ESI: Device Description
SII: Slave Information /IF
Device Profiles
Modular Devices
Drives
Configuration Tool
EtherCAT Master
Standards&Implementation

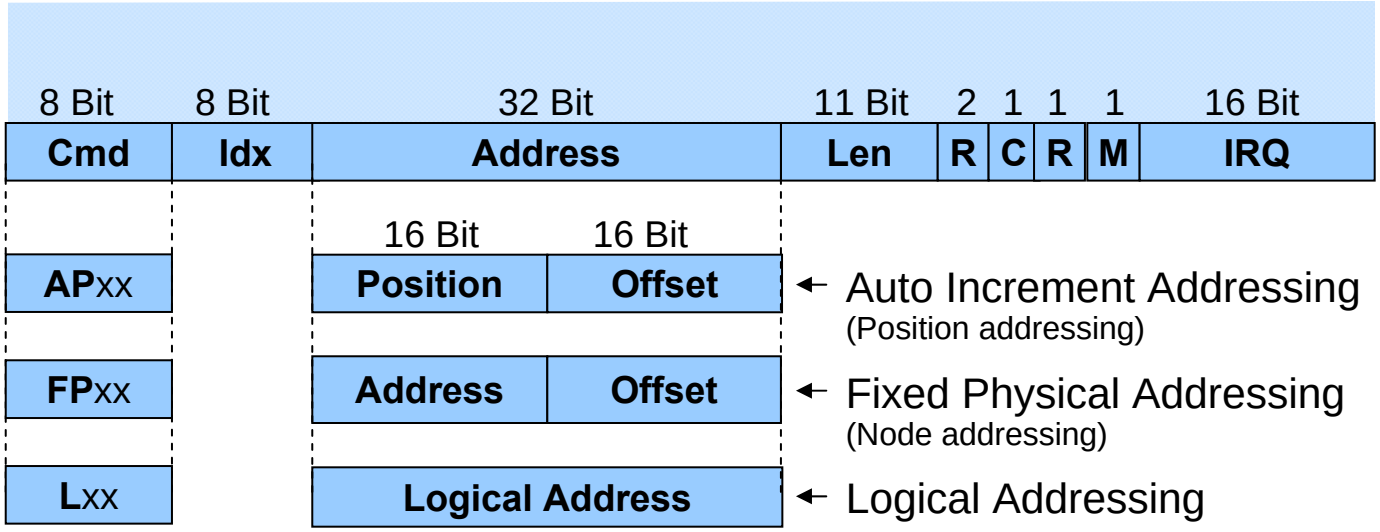

- 32 Bit address space
  - used for 16 bit device addressing (position or fixed) (65,535 devices possible) and 16 bit for addressing local memory space of device (max. 64kByte)

or

  - 32 bit logical addressing

© EtherCAT Technology Group

Auto Increment Addressing

16 Bit	16 Bit
Position	**Offset**

EtherCAT Basics
Slave Structure
Device Model (ISO/OSI)
Physical Layer
Data Link Layer
- Frame Structure
- Addressing
- Commands
- Memory/Registers
- SyncManager
- FMMU
- Diagnosis

Distributed Clocks
Application Layer
- State Machine

Mailbox
- Mailbox Interface
- EoE Ethernet
- CoE CANopen
- FoE File Access
- SoE Servo Drive

ESI: Device Description
SII: Slave Information /IF
Device Profiles
- Modular Devices
- Drives

Configuration Tool
EtherCAT Master
Standards&Implementation

- Negative Auto Increment Address for every slave depending on position (16 bit)
- Slave which reads address == 0x0000 is addressed
- Every slave increments address by 1
- Offset addresses local memory space of device
- Usually used during scan of hardware configuration

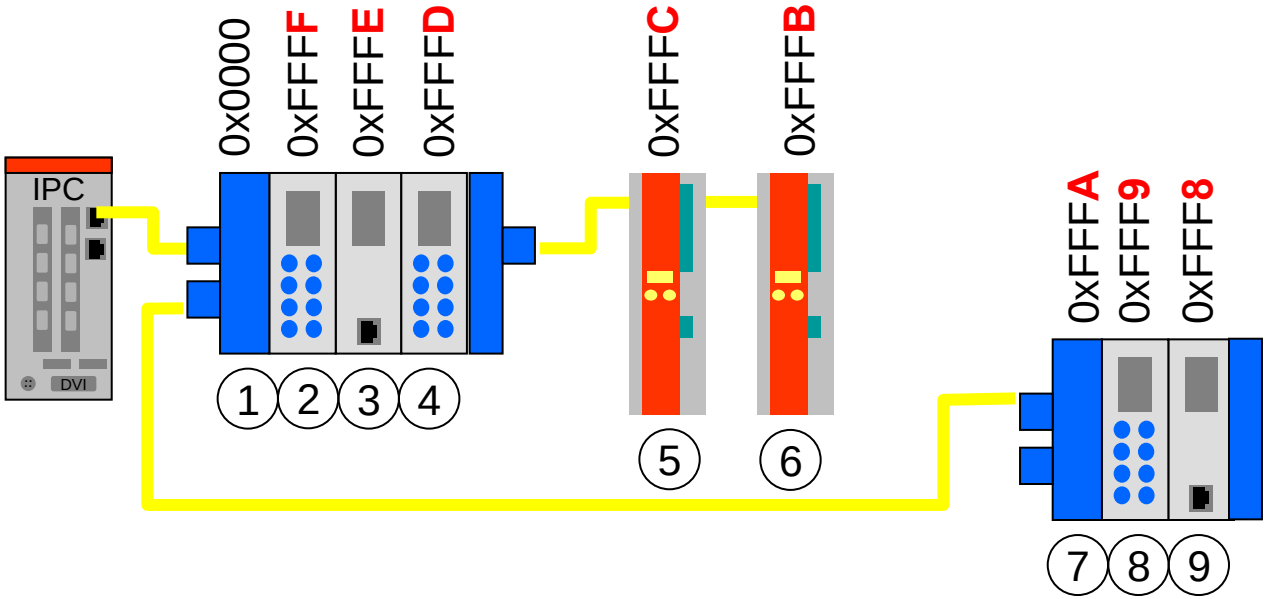

© EtherCAT Technology Group

Fixed Addressing

16 Bit	16 Bit
Address	**Offset**

EtherCAT Basics
Slave Structure
Device Model (ISO/OSI)
Physical Layer
Data Link Layer
- Frame Structure
- Addressing
- Commands
- Memory/Registers
- SyncManager
- FMMU
- Diagnosis

Distributed Clocks
Application Layer
- State Machine

Mailbox
- Mailbox Interface
- EoE Ethernet
- CoE CANopen
- FoE File Access
- SoE Servo Drive

ESI: Device Description
SII: Slave Information /IF
Device Profiles
- Modular Devices
- Drives

Configuration Tool
EtherCAT Master
Standards&Implementation

- Every Slave has a fixed address (16 bit)
- Usually assigned during hardware configuration scan
- Independent from slave position
- Fixed address lost after power loss

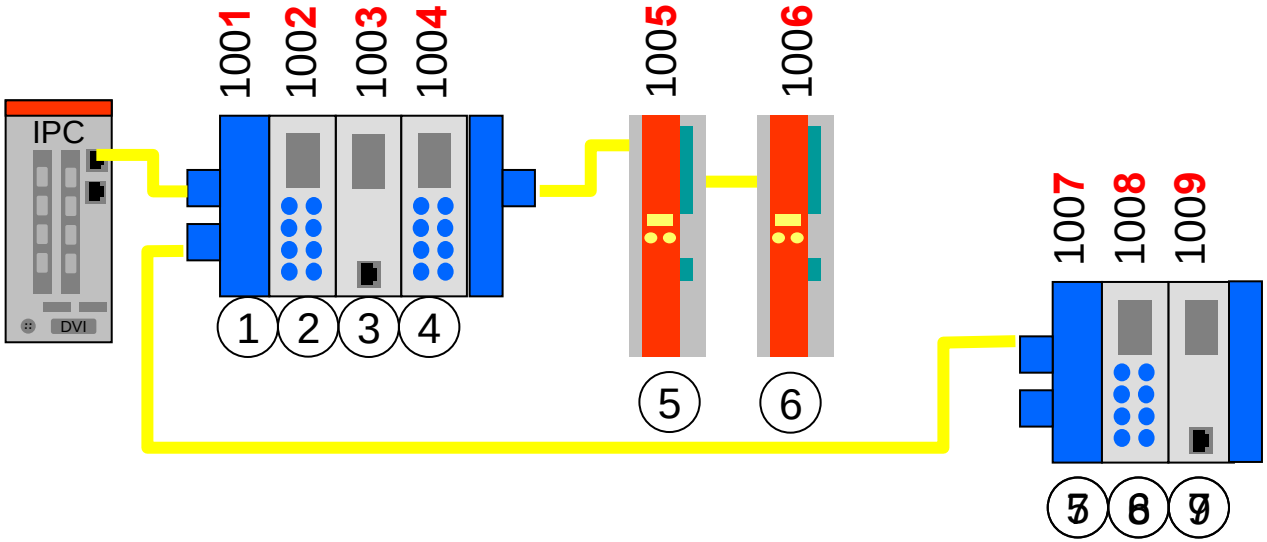

© EtherCAT Technology Group

Logical Addressing

32 Bit

Logical Address

EtherCAT Basics
Slave Structure
Device Model (ISO/OSI)
Physical Layer
Data Link Layer
- Frame Structure
- Addressing
- Commands
- Memory/Registers
- SyncManager
- FMMU
- Diagnosis

Distributed Clocks
Application Layer
- State Machine

Mailbox
- Mailbox Interface
- EoE Ethernet
- CoE CANopen
- FoE File Access
- SoE Servo Drive

ESI: Device Description
SII: Slave Information /IF
Device Profiles
- Modular Devices
- Drives

Configuration Tool
EtherCAT Master
Standards&Implementation

- Slave reads from/ writes its data into the 4 GByte sized Ethernet frame (fragmented)

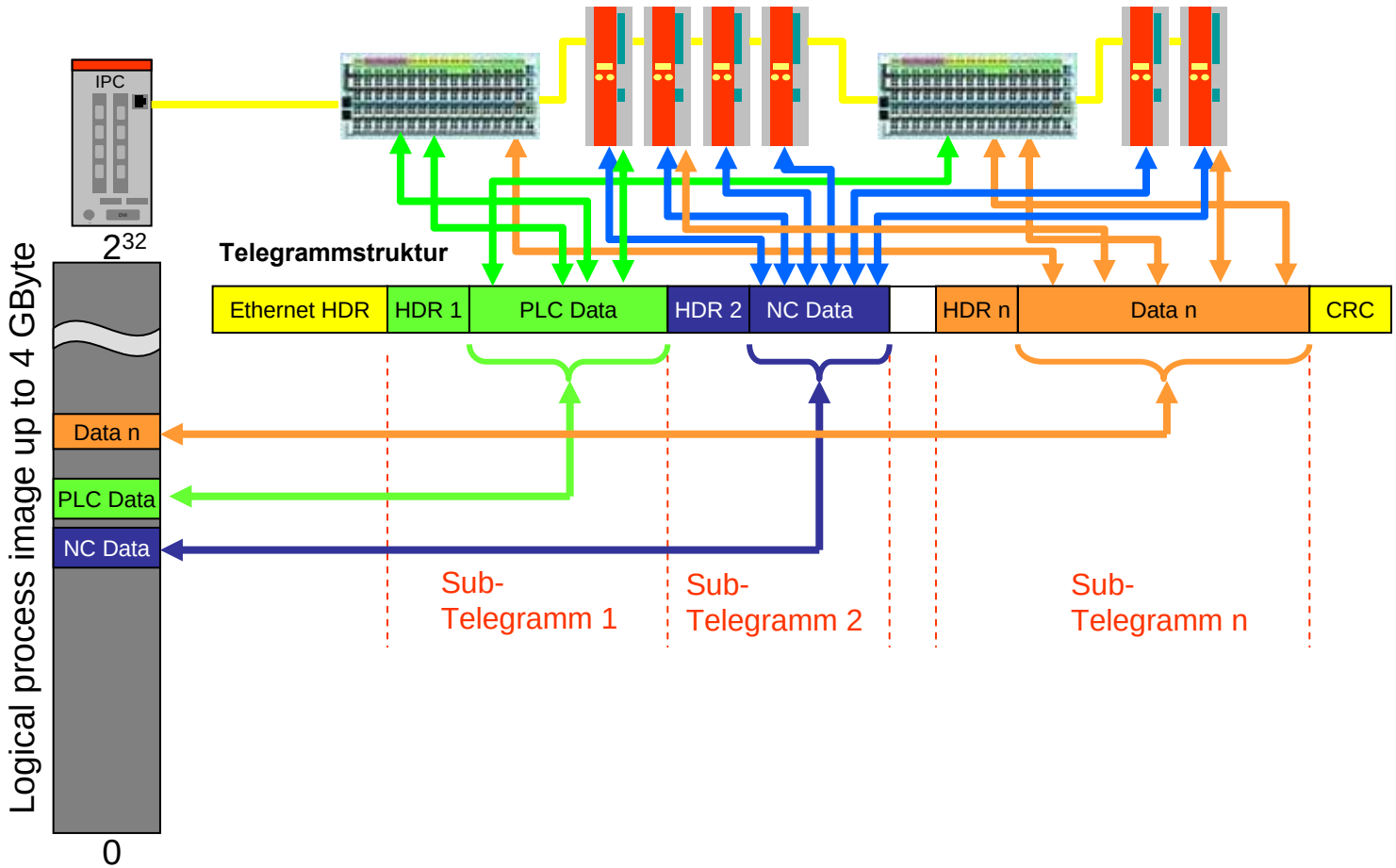

© EtherCAT Technology Group

EtherCAT Commands

EtherCAT Basics
Slave Structure
Device Model (ISO/OSI)
Physical Layer
Data Link Layer
Frame Structure
Addressing
Commands
Memory/Registers
SyncManager
FMMU
Diagnosis
Distributed Clocks
Application Layer
State Machine
Mailbox
Mailbox Interface
EoE Ethernet
CoE CANopen
FoE File Access
SoE Servo Drive
ESI: Device Description
SII: Slave Information /IF
Device Profiles
Modular Devices
Drives
Configuration Tool
EtherCAT Master
Standards&Implementation

- Different commands to optimize reading and writing for all access methods within a Fieldbus communication system

Cmd	Idx	Address	Offset	Len	R	C	R	M	IRQ

Cmd Type	Access	Address	Offset	Comment
NOP				No Operation
Auto Increment	R, W, RW, RMW	Position (increments)	Local Memory Address	Position value 0 (at entry) addressed
Fixed Address	R, W, RW, RMW	Address (configured)	Local Memory Address	Match address value to local address register
Broadcast	R, W, RW	(increments)	Local Memory Address	
Logical	R, W, RW	32 Bit logical address		

© EtherCAT Technology Group

EtherCAT Commands

EtherCAT Basics
Slave Structure
Device Model (ISO/OSI)
Physical Layer
Data Link Layer
Frame Structure
Addressing
Commands
Memory/Registers
SyncManager
FMMU
Diagnosis
Distributed Clocks
Application Layer
State Machine
Mailbox
Mailbox Interface
EoE Ethernet
CoE CANopen
FoE File Access
SoE Servo Drive
ESI: Device Description
SII: Slave Information /IF
Device Profiles
Modular Devices
Drives
Configuration Tool
EtherCAT Master
Standards&Implementation

- Broadcast Read
  - Individual Bits of a Byte will be added with a bitwise OR operation between incoming data and local data
- Read Write Actions
  - Exchange of incoming data and local data (exception: Broadcast – see broadcast read)
- Read Multiple Write Actions (RMW)
  - Addressed Station will read the others will write

© EtherCAT Technology Group

EtherCAT Datagram Header Address

EtherCAT Basics
Slave Structure
Device Model (ISO/OSI)
Physical Layer
Data Link Layer
- Frame Structure
- Addressing
- Commands
- Memory/Registers
- SyncManager
- FMMU
- Diagnosis

Distributed Clocks
Application Layer
- State Machine

Mailbox
- Mailbox Interface
- EoE Ethernet
- CoE CANopen
- FoE File Access
- SoE Servo Drive

ESI: Device Description
SII: Slave Information /IF
Device Profiles
- Modular Devices
- Drives

Configuration Tool
EtherCAT Master
Standards&Implementation

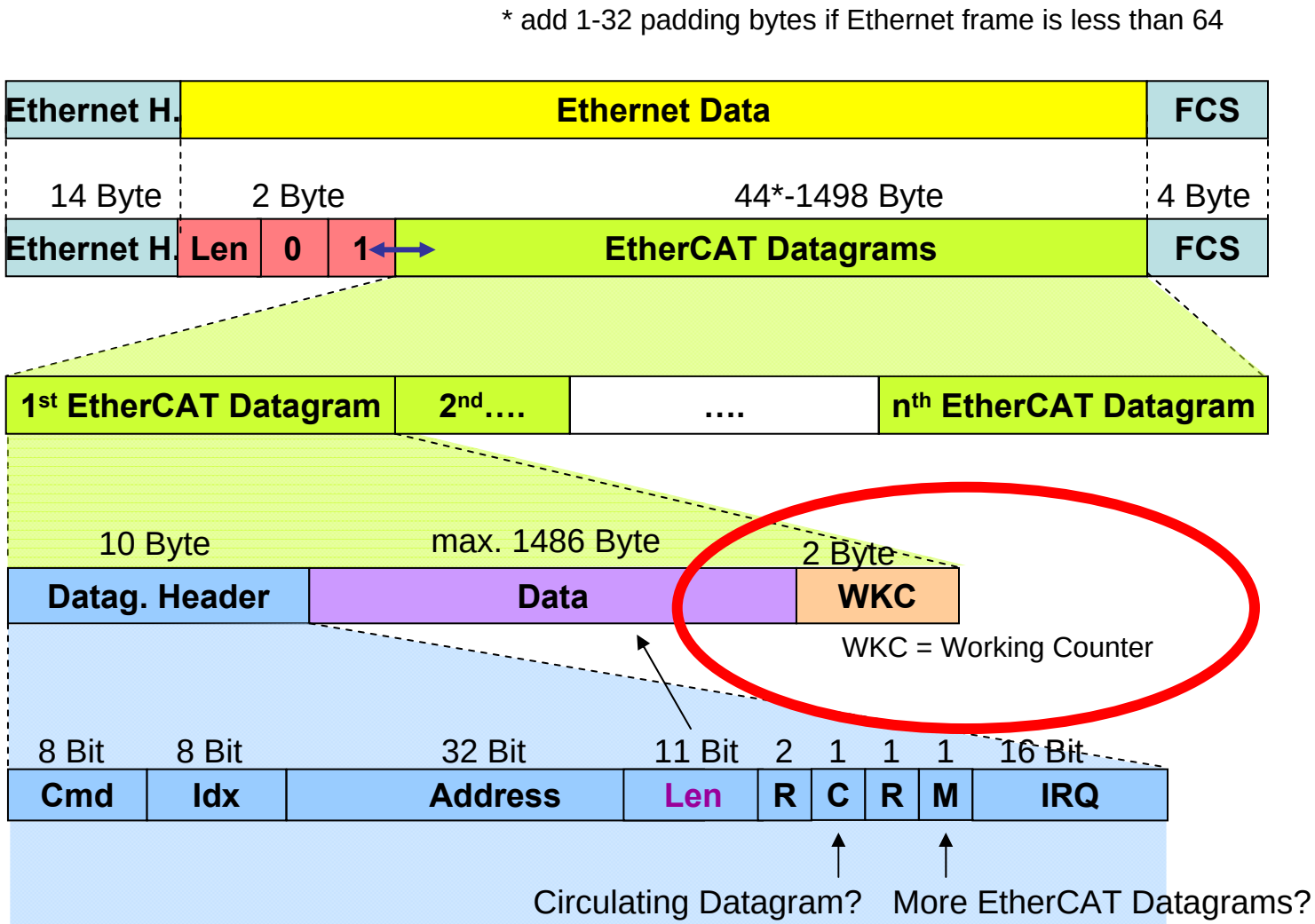

© EtherCAT Technology Group

Working Counter Details

EtherCAT Basics
Slave Structure
Device Model (ISO/OSI)
Physical Layer
Data Link Layer
Frame Structure
Addressing
Commands
Memory/Registers
SyncManager
FMMU
Diagnosis
Distributed Clocks
Application Layer
State Machine
Mailbox
Mailbox Interface
EoE Ethernet
CoE CANopen
FoE File Access
SoE Servo Drive
ESI: Device Description
SII: Slave Information /IF
Device Profiles
Modular Devices
Drives
Configuration Tool
EtherCAT Master
Standards&Implementation

- EtherCAT Datagram ends with a 16 Bit Working Counter
- Working Counter counts the number of interactions of devices addressed by an EtherCAT Datagram
- EtherCAT Slave Controller increments the Working Counter in hardware – if the controller is addressed and the addressed memory is accessible (Sync Manager)
- Each Datagram should have an expected Working counter value – calculated by the configuration tool
- The Master checks the valid processing of EtherCAT Datagrams by comparing the Working Counter with the expected value
- Special case: RW addressing methods will increment WKC by 2 for write access and by 1 for read access

© EtherCAT Technology Group

Working Counter Example

EtherCAT Basics
Slave Structure
Device Model (ISO/OSI)
Physical Layer
Data Link Layer
Frame Structure
Addressing
Commands
Memory/Registers
SyncManager
FMMU
Diagnosis
Distributed Clocks
Application Layer
State Machine
Mailbox
Mailbox Interface
EoE Ethernet
CoE CANopen
FoE File Access
SoE Servo Drive
ESI: Device Description
SII: Slave Information /IF
Device Profiles
Modular Devices
Drives
Configuration Tool
EtherCAT Master
Standards&Implementation

- WKC valid: data of this datagram was written to and read from all addressed devices
- WKC invalid: memory of one or more devices was not accessible

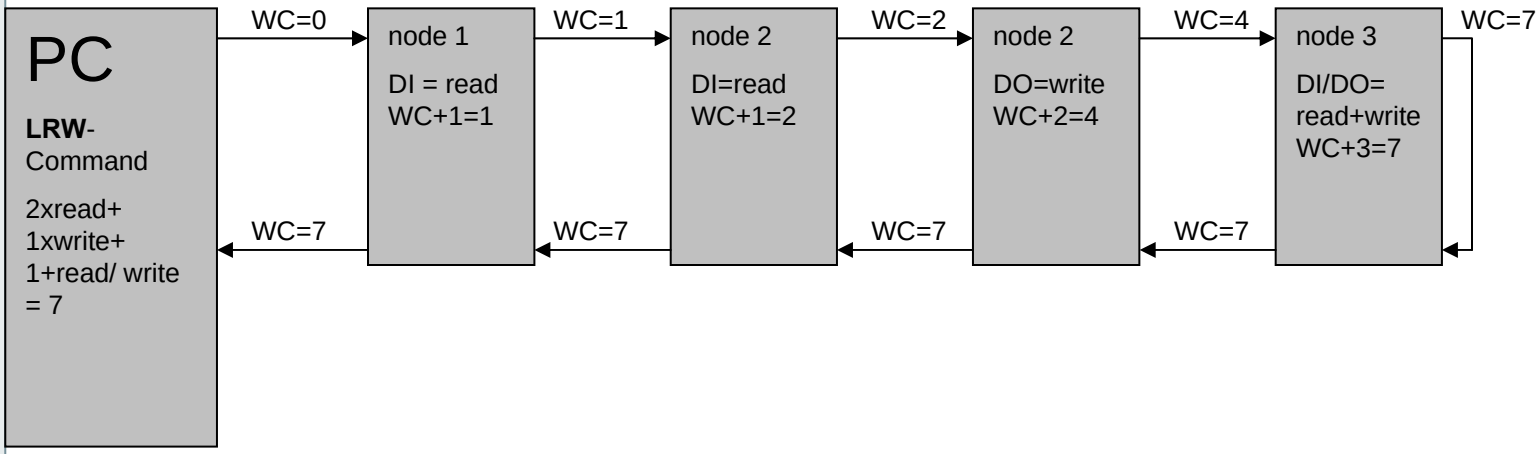

© EtherCAT Technology Group

Working Counter Example

EtherCAT Basics
Slave Structure
Device Model (ISO/OSI)
Physical Layer
Data Link Layer
- Frame Structure
- Addressing
- Commands
- Memory/Registers
- SyncManager
- FMMU
- Diagnosis

Distributed Clocks
Application Layer
- State Machine

Mailbox
- Mailbox Interface
- EoE Ethernet
- CoE CANopen
- FoE File Access
- SoE Servo Drive

ESI: Device Description
SII: Slave Information /IF
Device Profiles
- Modular Devices
- Drives

Configuration Tool
EtherCAT Master
Standards&Implementation

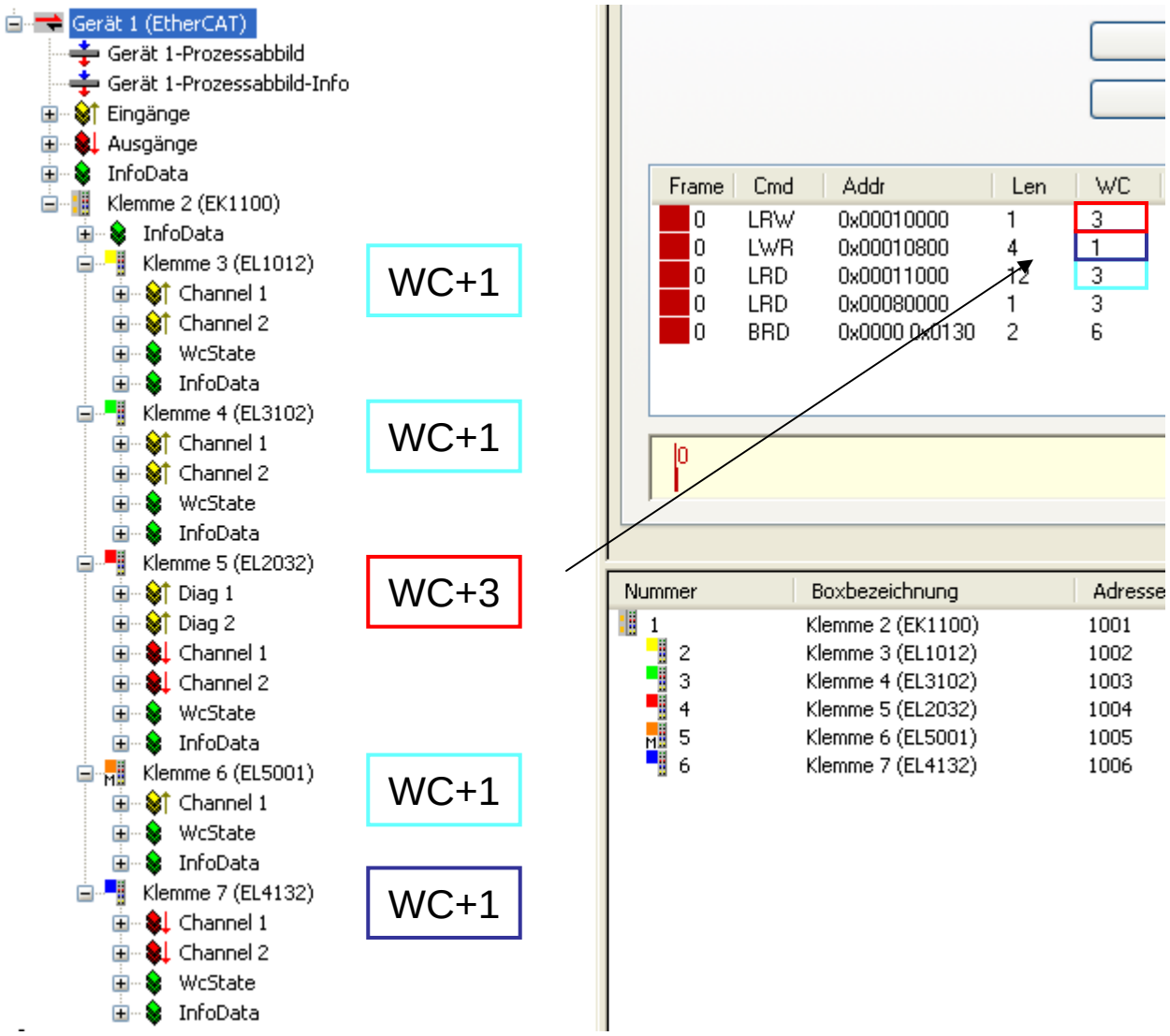

© EtherCAT Technology Group

Local Address Space of ESC

EtherCAT Basics
Slave Structure
Device Model (ISO/OSI)
Physical Layer
Data Link Layer
- Frame Structure
- Addressing
- Commands
- Memory/Registers
- SyncManager
- FMMU
- Diagnosis

Distributed Clocks
Application Layer
- State Machine

Mailbox
- Mailbox Interface
- EoE Ethernet
- CoE CANopen
- FoE File Access
- SoE Servo Drive

ESI: Device Description
SII: Slave Information /IF
Device Profiles
- Modular Devices
- Drives

Configuration Tool
EtherCAT Master
Standards&Implementation

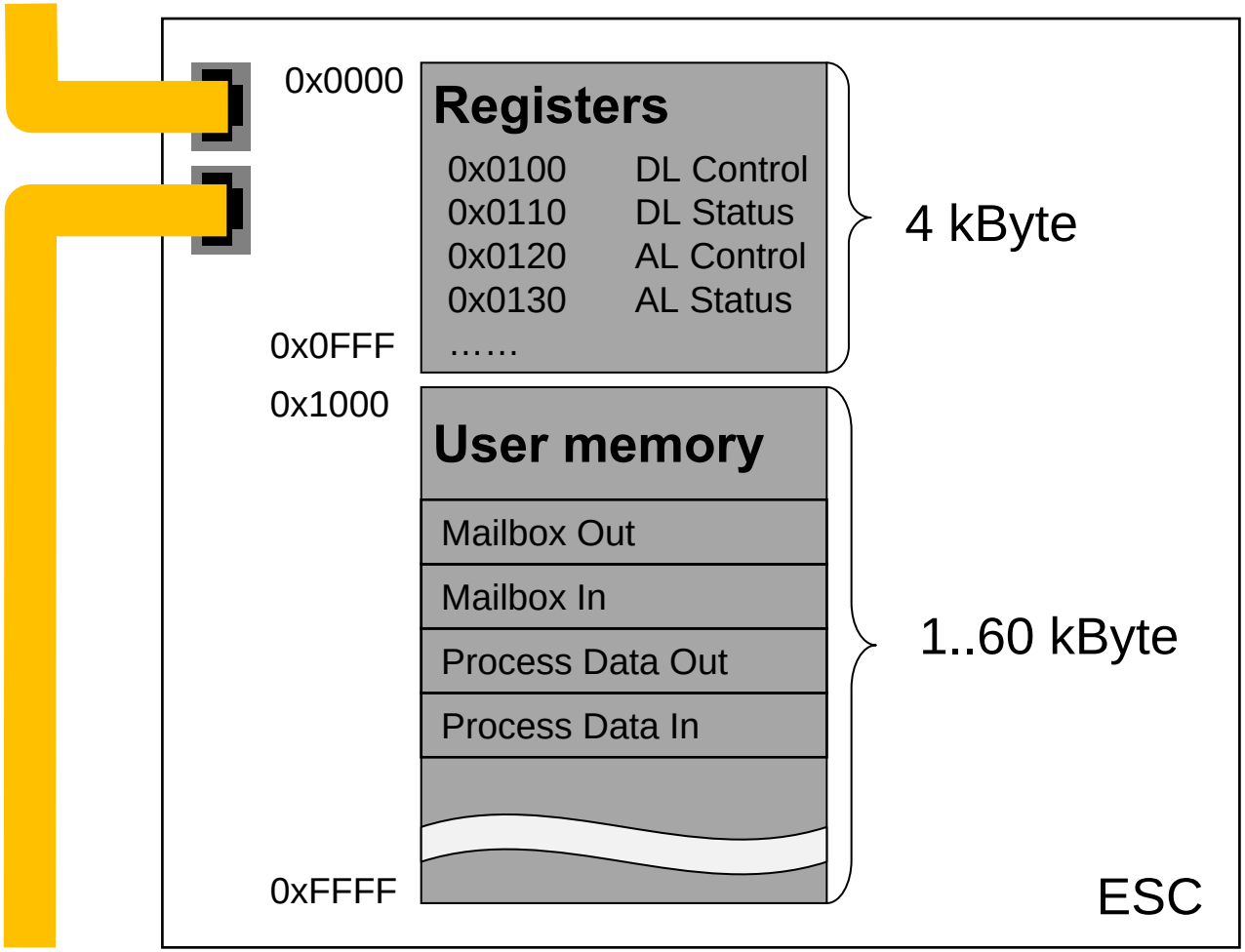

© EtherCAT Technology Group

Local Address Space of ESC

EtherCAT Basics
Slave Structure
Device Model (ISO/OSI)
Physical Layer
Data Link Layer
Frame Structure
Addressing
Commands
Memory/Registers
SyncManager
FMMU
Diagnosis
Distributed Clocks
Application Layer
State Machine
Mailbox
Mailbox Interface
EoE Ethernet
CoE CANopen
FoE File Access
SoE Servo Drive
ESI: Device Description
SII: Slave Information /IF
Device Profiles
Modular Devices
Drives
Configuration Tool
EtherCAT Master
Standards&Implementation

- 64 kByte address space
- Divided into registers and dual ported RAM (DPRAM)
- First 4 kByte are reserved for registers
- DPRAM starts at 1000h
- DPRAM size depends on Slave Controller implementation (up to 60 kByte, 4kByte in actual FPGA implementation)
- Addressing of registers and DPRAM same
- Register Write is different –
  shadow Register for all Registers integrated
  DPRAM write is not shadowed

© EtherCAT Technology Group

Register of EtherCAT Slave Controller

EtherCAT Basics
Slave Structure
Device Model (ISO/OSI)
Physical Layer
Data Link Layer
Frame Structure
Addressing
Commands
Memory/Registers
SyncManager
FMMU
Diagnosis
Distributed Clocks
Application Layer
State Machine
Mailbox
Mailbox Interface
EoE Ethernet
CoE CANopen
FoE File Access
SoE Servo Drive
ESI: Device Description
SII: Slave Information /IF
Device Profiles
Modular Devices
Drives
Configuration Tool
EtherCAT Master
Standards&Implementation

- First 1000h bytes (4 kBytes) of local address space
- Read access for both sides (EtherCAT and application)
- Write access from EtherCAT for most of the registers
  - Master has to configure the Slave Controller
    - No address settings needed
    - FMMU and Sync Manager configuration can be optimized for available bandwidth and cycle times
  - Exceptions that are writable from the application side:
    - AL Status Register, AL Status Code Register, AL Event Mask Register, Sync Manager Disable Registers, AL Identification Registers
- Process Data Interface (PDI) register initialized from Slave Information interface (Serial EEPROM)

© EtherCAT Technology Group

Register

Demo

EtherCAT Basics
Slave Structure
Device Model (ISO/OSI)
Physical Layer
Data Link Layer
- Frame Structure
- Addressing
- Commands
- Memory/Registers
- SyncManager
- FMMU
- Diagnosis

Distributed Clocks
Application Layer
- State Machine

Mailbox
- Mailbox Interface
- EoE Ethernet
- CoE CANopen
- FoE File Access
- SoE Servo Drive

ESI: Device Description
SII: Slave Information /IF
Device Profiles
- Modular Devices
- Drives

Configuration Tool
EtherCAT Master
Standards&Implementation

- Registers might be monitored via configuration tool

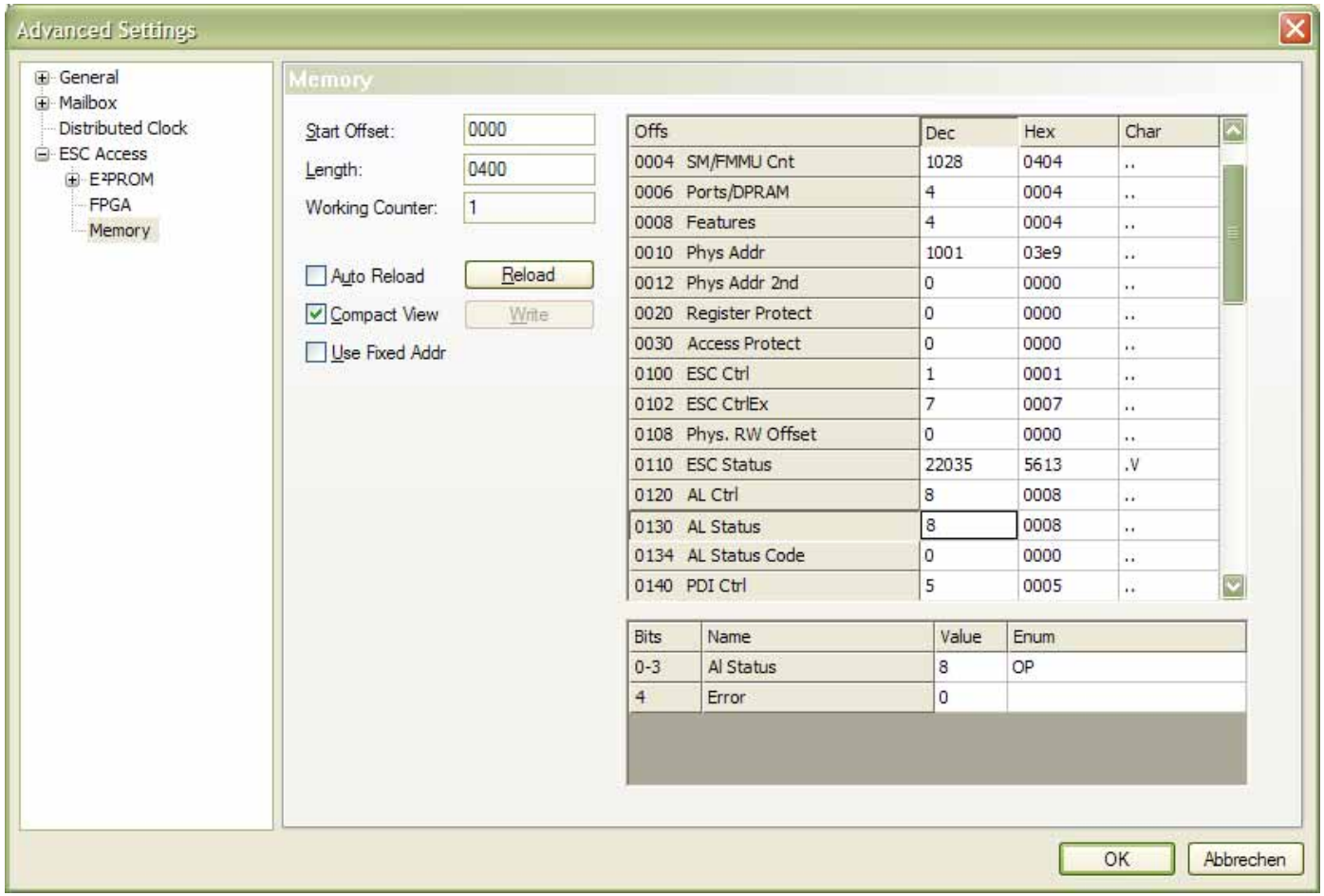

© EtherCAT Technology Group

Register – ESC Data Sheet

Demo

EtherCAT Basics
Slave Structure
Device Model (ISO/OSI)
Physical Layer
Data Link Layer
Frame Structure
Addressing
Commands
Memory/Registers
SyncManager
FMMU
Diagnosis
Distributed Clocks
Application Layer
State Machine
Mailbox
Mailbox Interface
EoE Ethernet
CoE CANopen
FoE File Access
SoE Servo Drive
ESI: Device Description
SII: Slave Information /IF
Device Profiles
Modular Devices
Drives
Configuration Tool
EtherCAT Master
Standards&Implementation

- Register description for every ESC (FPGA/ ASIC)
  - DL Information, DL Control, DL Status, DL Address
  - AL Control, AL Status, AL Event
  - SyncManager + FMMU configuration
  - Distributed Clocks
  - Slave Information interface (Serial EEPROM)

Address	Length (Byte)	Description		EtherCAT Access	PDI Access
0x0100:0x0103	4	DL Control		r/w	r/-
0x0108:0x0109	2	Physical Read/Write Offset		r/w	r/-
0x0110:0x0111	2	DL Status	**Enable Disable Ports**	r/-	r/-
0x0120:0x0121	2	AL Control	**Control of the device state machine**	r/w	r/-
0x0130:0x0131	2	AL Status	**Status of the device state machine**	r/-	r/w
0x0134:0x0135	2	AL Status Code	**Error Code**	r/-	r/w
0x0140:0x0141	2	PDI Control	**32 Bit I/0, SPI, µC Interface**	r/w	r/w

© EtherCAT Technology Group

SyncManager Overview

EtherCAT Basics
Slave Structure
Device Model (ISO/OSI)
Physical Layer
Data Link Layer
Frame Structure
Addressing
Commands
Memory/Registers
SyncManager
FMMU
Diagnosis
Distributed Clocks
Application Layer
State Machine
Mailbox
Mailbox Interface
EoE Ethernet
CoE CANopen
FoE File Access
SoE Servo Drive
ESI: Device Description
SII: Slave Information /IF
Device Profiles
Modular Devices
Drives
Configuration Tool
EtherCAT Master
Standards&Implementation

- SyncManager protects a DPRAM section from simultaneous access → data consistency
- Up to 16 independent SyncManger channels possible
- The SyncManager configuration registers start at address 0x0800

© EtherCAT Technology Group

SyncManager Types

EtherCAT Basics
Slave Structure
Device Model (ISO/OSI)
Physical Layer
Data Link Layer
Frame Structure
Addressing
Commands
Memory/Registers
SyncManager
FMMU
Diagnosis
Distributed Clocks
Application Layer
State Machine
Mailbox
Mailbox Interface
EoE Ethernet
CoE CANopen
FoE File Access
SoE Servo Drive
ESI: Device Description
SII: Slave Information /IF
Device Profiles
Modular Devices
Drives
Configuration Tool
EtherCAT Master
Standards&Implementation

- Mailbox Type
  - 1 buffer SyncManager supports handshake
  - Data overflow protection
  - Writing side must write before reading side can read
  - Reading side must read before writing side can write again

- Buffered Type
  - 3 buffer SyncManager guarantees consistent data delivery and access to the newest data any time
  - Always a free buffer to write
  - Always a consistent buffer to read (except before the first writing)
  - Usually used for process data communication

© EtherCAT Technology Group

Buffered Type (3 buffers) Write Example

EtherCAT Basics
Slave Structure
Device Model (ISO/OSI)
Physical Layer
Data Link Layer
- Frame Structure
- Addressing
- Commands
- Memory/Registers
- SyncManager
- FMMU
- Diagnosis

Distributed Clocks
Application Layer
- State Machine

Mailbox
- Mailbox Interface
- EoE Ethernet
- CoE CANopen
- FoE File Access
- SoE Servo Drive

ESI: Device Description
SII: Slave Information /IF
Device Profiles
- Modular Devices
- Drives

Configuration Tool
EtherCAT Master
Standards&Implementation

- Characteristic: Data always available for both sides
- Requires 3 (consecutive) memory areas

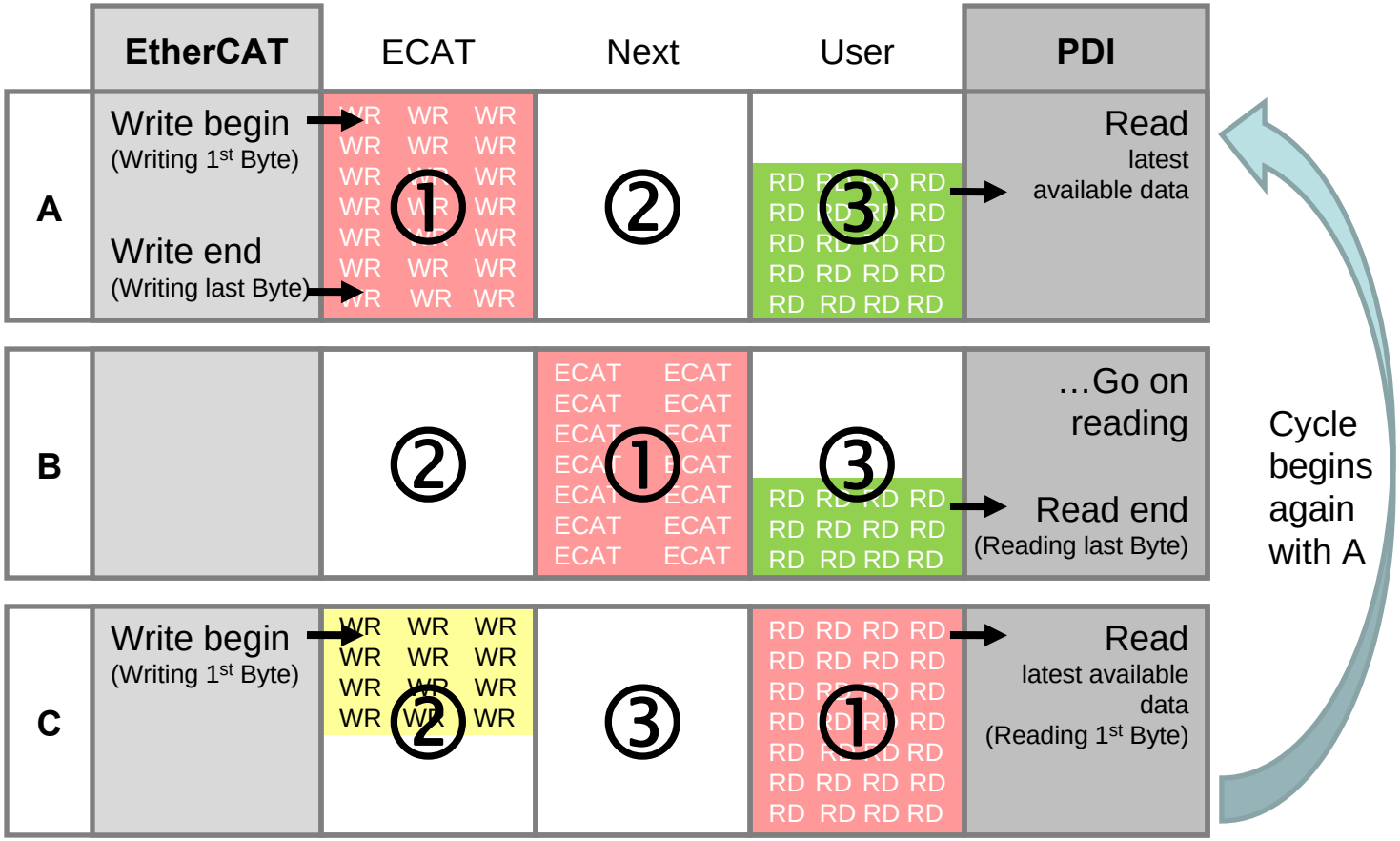

© EtherCAT Technology Group

Mailbox Type (1 buffer) Read Example

EtherCAT Basics
Slave Structure
Device Model (ISO/OSI)
Physical Layer
Data Link Layer
- Frame Structure
- Addressing
- Commands
- Memory/Registers
- SyncManager
- FMMU
- Diagnosis

Distributed Clocks
Application Layer
- State Machine

Mailbox
- Mailbox Interface
- EoE Ethernet
- CoE CANopen
- FoE File Access
- SoE Servo Drive

ESI: Device Description
SII: Slave Information /IF
Device Profiles
- Modular Devices
- Drives

Configuration Tool
EtherCAT Master
Standards&Implementation

- Allows handshake Communication
- Useful for non-Process Data
- Handshake mechanism – one side has control

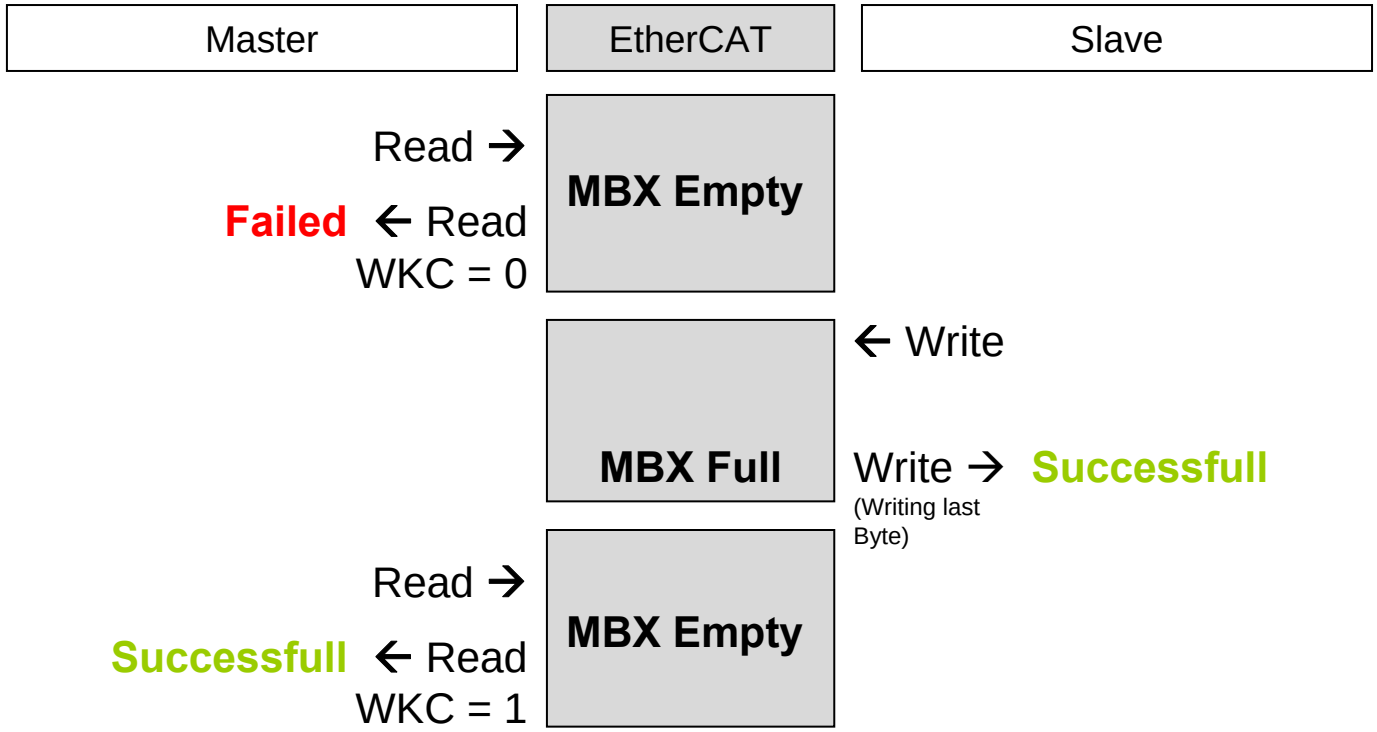

© EtherCAT Technology Group

SyncManager channel configuration registers

EtherCAT Basics
Slave Structure
Device Model (ISO/OSI)
Physical Layer
Data Link Layer
- Frame Structure
- Addressing
- Commands
- Memory/Registers
- SyncManager
- FMMU
- Diagnosis

Distributed Clocks
Application Layer
- State Machine

Mailbox
- Mailbox Interface
- EoE Ethernet
- CoE CANopen
- FoE File Access
- SoE Servo Drive

ESI: Device Description
SII: Slave Information /IF
Device Profiles
- Modular Devices
- Drives

Configuration Tool
EtherCAT Master
Standards&Implementation

SM register is from 0x0800+y*0x08 to 0x0807+y*0x08

y= SM index range 0..15

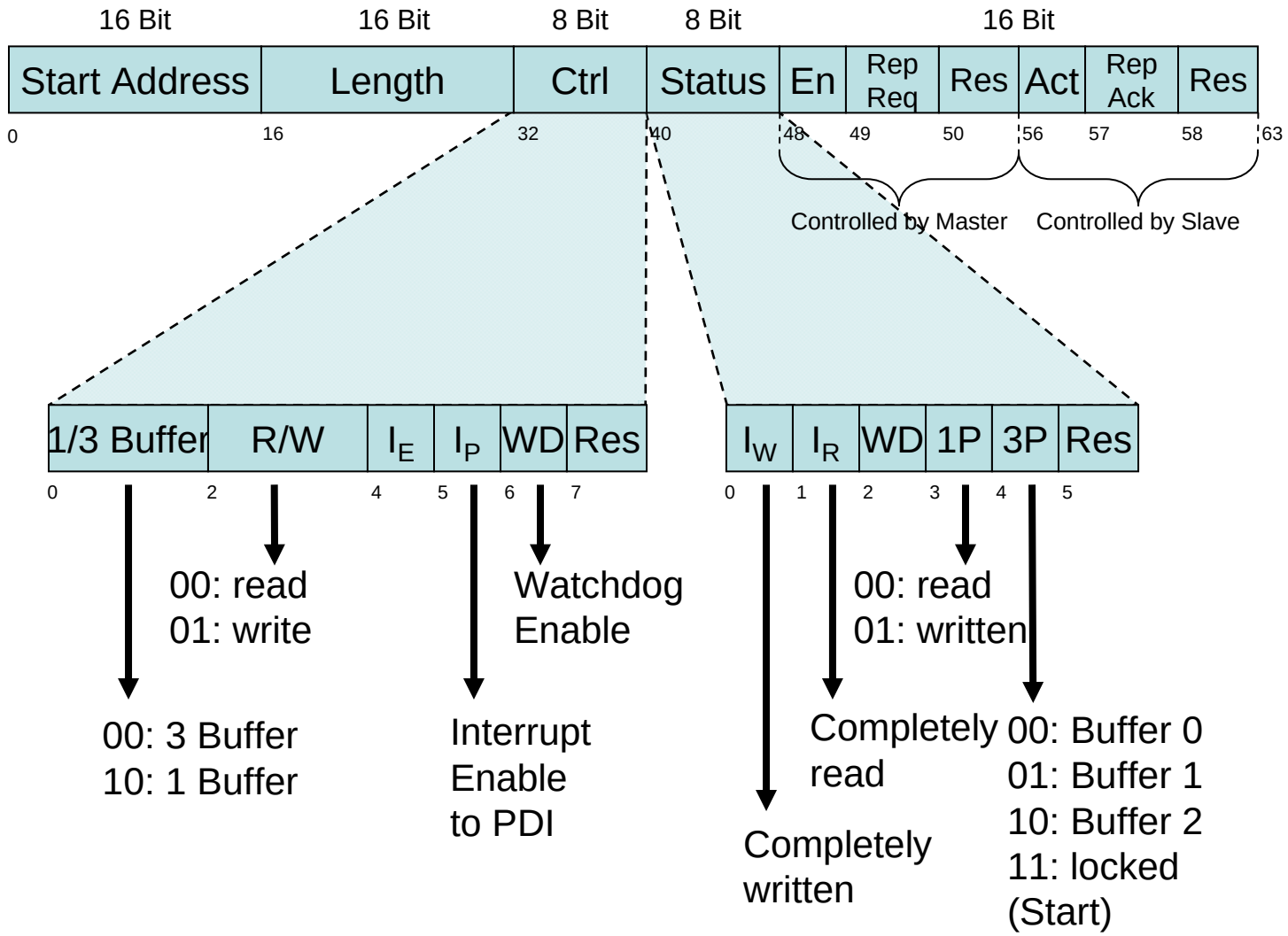

© EtherCAT Technology Group

SyncManager Assignment

EtherCAT Basics
Slave Structure
Device Model (ISO/OSI)
Physical Layer
Data Link Layer
Frame Structure
Addressing
Commands
Memory/Registers
SyncManager
FMMU
Diagnosis
Distributed Clocks
Application Layer
State Machine
Mailbox
Mailbox Interface
EoE Ethernet
CoE CANopen
FoE File Access
SoE Servo Drive
ESI: Device Description
SII: Slave Information /IF
Device Profiles
Modular Devices
Drives
Configuration Tool
EtherCAT Master
Standards&Implementation

- Standard assignment
  - With mailbox support
    - SM0: Mailbox output
    - SM1: Mailbox input
    - SM2: Process data outputs
    - SM3: Process data inputs
    - Readable via CoE object 1C00h
  - Without mailbox support
    - SM0: Process data outputs
      (or inputs if no outputs available)
    - SM1: Process data inputs
- Extended assignment
  - SM0: Mailbox output
  - SM1: Mailbox input
  - SM left are configurable via CoE object 1C00h

- One or more PDO always fits exactly into a SyncManager

© EtherCAT Technology Group

Fieldbus Memory Management Unit (FMMU)

EtherCAT Basics
Slave Structure
Device Model (ISO/OSI)
Physical Layer
Data Link Layer
Frame Structure
Addressing
Commands
Memory/Registers
SyncManager
FMMU
Diagnosis
Distributed Clocks
Application Layer
State Machine
Mailbox
Mailbox Interface
EoE Ethernet
CoE CANopen
FoE File Access
SoE Servo Drive
ESI: Device Description
SII: Slave Information /IF
Device Profiles
Modular Devices
Drives
Configuration Tool
EtherCAT Master
Standards&Implementation

- Maps a section of the local address space into the global address space and vice versa
- Read and write access distinguishable
- Bitwise configuration of the memory section possible
- Up to 16 independent FMMU channels possible
  - FMMU configuration registers start at address 0x0600

Operation samples:

- Mapping of process data into the global address space
- Mapping of status bits from the register section
  - Access to device specific status information with a minimum overhead – e.g. fill status of a sync manager channel

© EtherCAT Technology Group

FMMU Usage for Addressing

EtherCAT Basics
Slave Structure
Device Model (ISO/OSI)
Physical Layer
Data Link Layer
Frame Structure
Addressing
Commands
Memory/Registers
SyncManager
FMMU
Diagnosis
Distributed Clocks
Application Layer
State Machine
Mailbox
Mailbox Interface
EoE Ethernet
CoE CANopen
FoE File Access
SoE Servo Drive
ESI: Device Description
SII: Slave Information /IF
Device Profiles
Modular Devices
Drives
Configuration Tool
EtherCAT Master
Standards&Implementation

- Global address space
- 4 GByte address space
- Mapping to local addresses by Fieldbus Memory Management Units (FMMU)
- All EtherCAT devices can map data in a single EtherCAT Datagram LRW – depending on the FMMU configuration

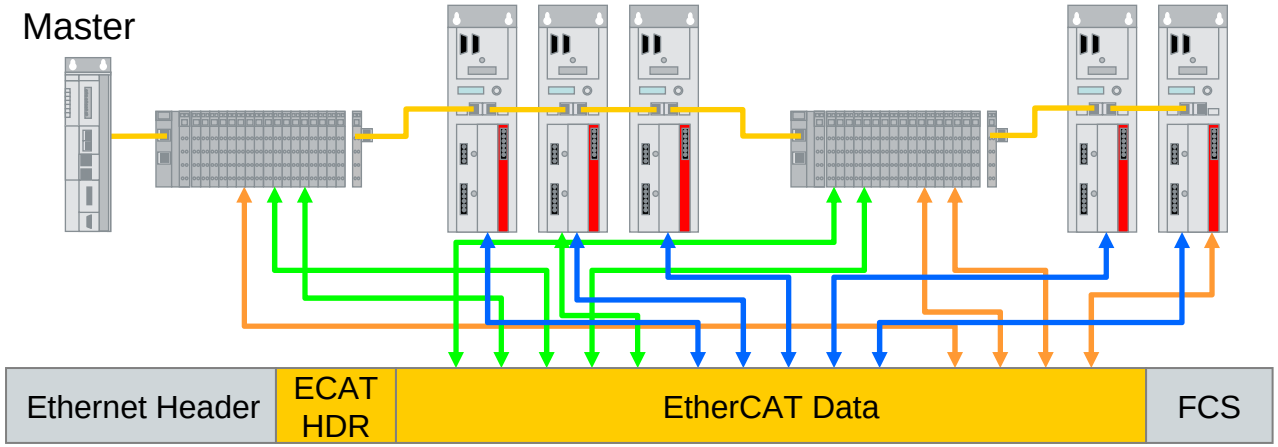

© EtherCAT Technology Group

FMMU entity configuration registers

EtherCAT Basics
Slave Structure
Device Model (ISO/OSI)
Physical Layer
Data Link Layer
- Frame Structure
- Addressing
- Commands
- Memory/Registers
- SyncManager
- FMMU
- Diagnosis

Distributed Clocks
Application Layer
- State Machine

Mailbox
- Mailbox Interface
- EoE Ethernet
- CoE CANopen
- FoE File Access
- SoE Servo Drive

ESI: Device Description
SII: Slave Information /IF
Device Profiles
- Modular Devices
- Drives

Configuration Tool
EtherCAT Master
Standards&Implementation

FMMU register is from 0x0600+y*0x10 to 0x060F+y*0x10

y= FMMU index range 0..15

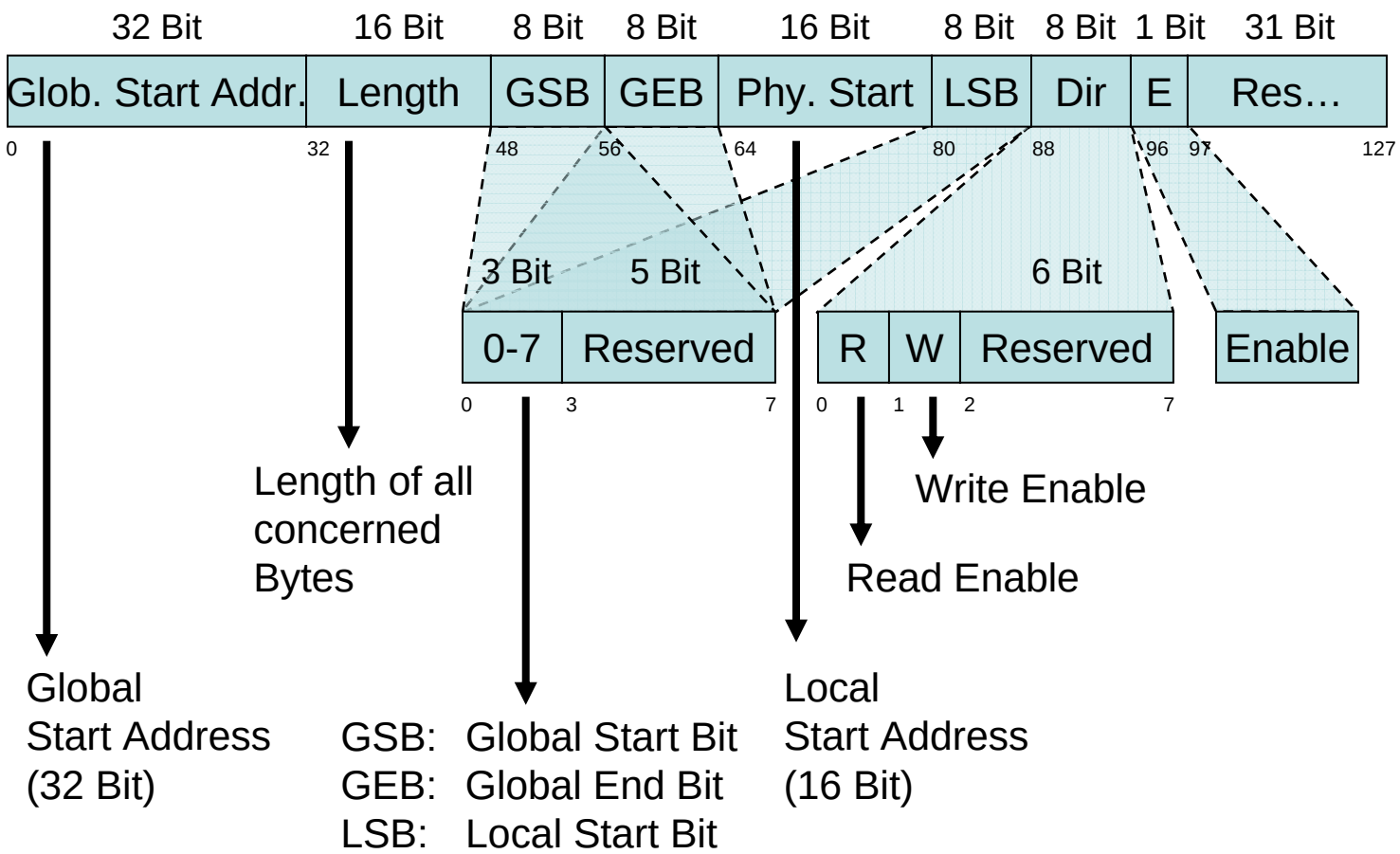

© EtherCAT Technology Group

FMMU entity configuration registers

EtherCAT Basics
Slave Structure
Device Model (ISO/OSI)
Physical Layer
Data Link Layer
Frame Structure
Addressing
Commands
Memory/Registers
SyncManager
FMMU
Diagnosis
Distributed Clocks
Application Layer
State Machine
Mailbox
Mailbox Interface
EoE Ethernet
CoE CANopen
FoE File Access
SoE Servo Drive
ESI: Device Description
SII: Slave Information /IF
Device Profiles
Modular Devices
Drives
Configuration Tool
EtherCAT Master
Standards&Implementation

FMMU Register from 0x6000 to 0x06FF

Reg. Addr. Offset	Lenth in Byte	Description
+0x0:0x3	4	Logical Start Address
+0x4:0x5	2	Length
+0x6	1	Logical Start bit
+0x7	1	Logical Stop bit
+0x8:0x9	2	Physical Start Address
+0xA	1	Physical Start bit
+0xB	1	Type
+0xC	1	Activate
+0xD:0xF	3	Reserved

© EtherCAT Technology Group

FMMU Setup

EtherCAT Basics
Slave Structure
Device Model (ISO/OSI)
Physical Layer
Data Link Layer
Frame Structure
Addressing
Commands
Memory/Registers
SyncManager
FMMU
Diagnosis
Distributed Clocks
Application Layer
State Machine
Mailbox
Mailbox Interface
EoE Ethernet
CoE CANopen
FoE File Access
SoE Servo Drive
ESI: Device Description
SII: Slave Information /IF
Device Profiles
Modular Devices
Drives
Configuration Tool
EtherCAT Master
Standards&Implementation

1. Master reads hardware configuration including input and output data length of each slave
2. Master organizes mapping of process data
3. Master distributes information (start address etc.) for every slave about where process data in logical process image is provided
4. Process data communication starts

© EtherCAT Technology Group

FMMU example

EtherCAT Basics
Slave Structure
Device Model (ISO/OSI)
Physical Layer
Data Link Layer
Frame Structure
Addressing
Commands
Memory/Registers
SyncManager
FMMU
Diagnosis
Distributed Clocks
Application Layer
State Machine
Mailbox
Mailbox Interface
EoE Ethernet
CoE CANopen
FoE File Access
SoE Servo Drive
ESI: Device Description
SII: Slave Information /IF
Device Profiles
Modular Devices
Drives
Configuration Tool
EtherCAT Master
Standards&Implementation

- Map 6 Bits form logical address 0x14711.3 to 0x14712.0 to the physical register bits 0x0F01.1 to 0x0F01.6.
  - The FMMU length is 2 Byte, since the mapped bits span 2 Bytes of the logical space.

FMMU config. register	FMMU reg. offset	Value
Logical Start Address	0x0:0x3	0x00014711
Length (Byte)	0x4:0x5	0x0002
Logical Start Bit	0x6	0x03
Logical Stop Bit	0x7	0x00
Physical Start Address	0x8:0x9	0x0F01
Physical Start Bit	0xA	0x01
Type	0xB	Rand and/or Write
Activate	0xC	1 (enable)

Note: FMMU configuration registers start at address 0x0600

© EtherCAT Technology Group

Diagnosis at Data Link – Possible Errors

EtherCAT Basics
Slave Structure
Device Model (ISO/OSI)
Physical Layer
Data Link Layer
Frame Structure
Addressing
Commands
Memory/Registers
SyncManager
FMMU
Diagnosis
Distributed Clocks
Application Layer
State Machine
Mailbox
Mailbox Interface
EoE Ethernet
CoE CANopen
FoE File Access
SoE Servo Drive
ESI: Device Description
SII: Slave Information /IF
Device Profiles
Modular Devices
Drives
Configuration Tool
EtherCAT Master
Standards&Implementation

Error situation	Detection
Wrong Station	Check EEPROM, Vendor, Device, SerialNo
Transmission Errors	Check Transmission Error Counter of each station
Change between In and Out Cable	Check Link Status of last device (should have only a single port connected) (Only for 2 Port devices)
Link loss/ Station fault	Check working counter of a Broadcast read
Frame loss	Close loop in the middle Check errors again If no frame loss repeat this in the 2nd half of segment Otherwise repeat this in the first half of segment Repeat this until only a single station remains, which should be the station with problems

© EtherCAT Technology Group

Monitoring of EtherCAT Communication

EtherCAT Basics
Slave Structure
Device Model (ISO/OSI)
Physical Layer
Data Link Layer
- Frame Structure
- Addressing
- Commands
- Memory/Registers
- SyncManager
- FMMU
- Diagnosis

Distributed Clocks
Application Layer
- State Machine

Mailbox
- Mailbox Interface
- EoE Ethernet
- CoE CANopen
- FoE File Access
- SoE Servo Drive

ESI: Device Description
SII: Slave Information /IF
Device Profiles
- Modular Devices
- Drives

Configuration Tool
EtherCAT Master
Standards&Implementation

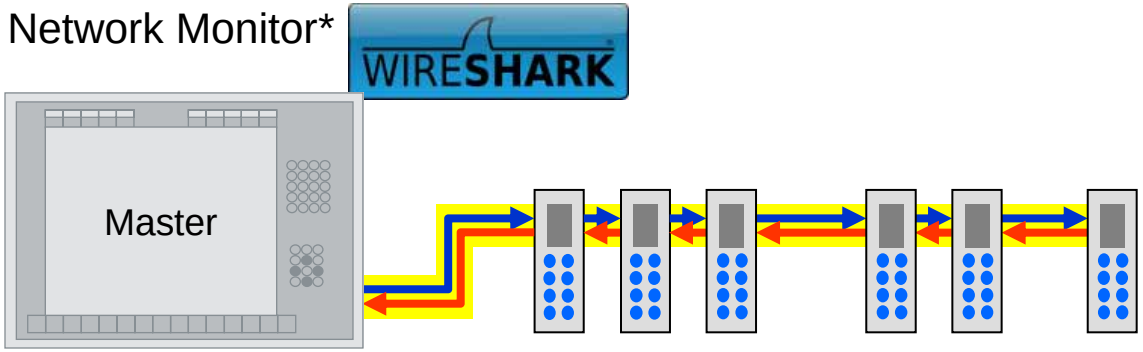

- Masters sends an EtherCAT Frame (broadcast)
  → Monitor gets the first copy (unprocessed)
- Frame returns from EtherCAT Slave Devices
  → Monitor gets the second copy (processed)

*Attention: At low cycle times order of frames might be mixed because of timing restrictions within NDIS protocol driver.

© EtherCAT Technology Group

Monitoring of EtherCAT Communication

EtherCAT Basics
Slave Structure
Device Model (ISO/OSI)
Physical Layer
Data Link Layer
- Frame Structure
- Addressing
- Commands
- Memory/Registers
- SyncManager
- FMMU
- Diagnosis

Distributed Clocks
Application Layer
- State Machine

Mailbox
- Mailbox Interface
- EoE Ethernet
- CoE CANopen
- FoE File Access
- SoE Servo Drive

ESI: Device Description
SII: Slave Information /IF
Device Profiles
- Modular Devices
- Drives

Configuration Tool
EtherCAT Master
Standards&Implementation

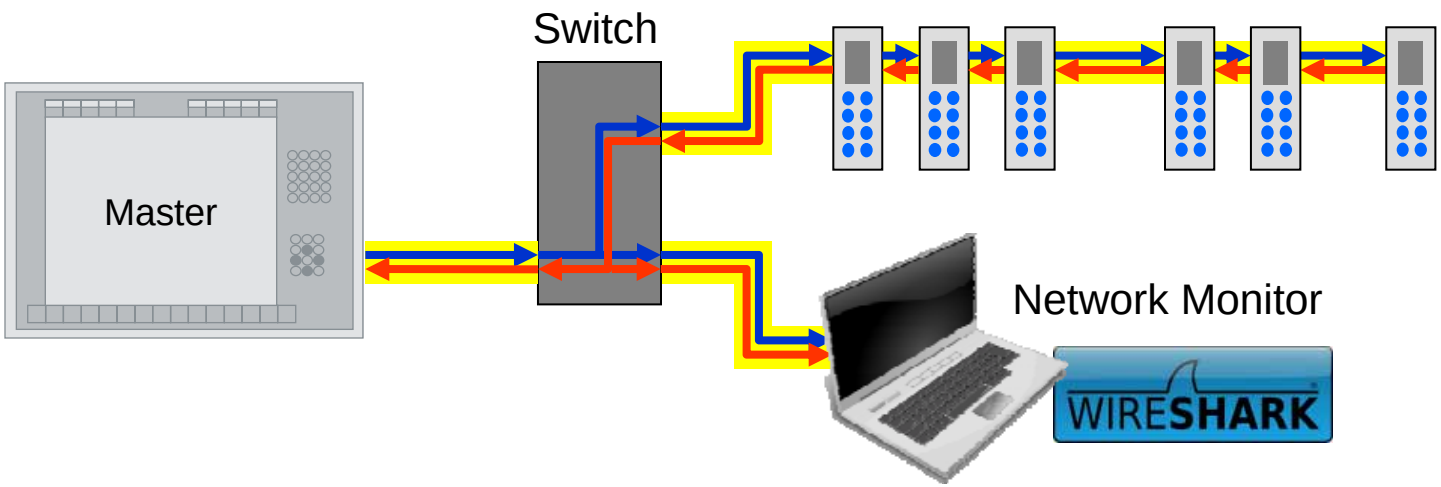

- Masters sends an EtherCAT Frame (broadcast)
  → Monitor gets the first copy (unprocessed)
- Frame returns from EtherCAT Slave Devices
  → Monitor gets the second copy (processed)

☒ Real-time performance is limited

© EtherCAT Technology Group

Monitoring of EtherCAT Communication

EtherCAT Basics
Slave Structure
Device Model (ISO/OSI)
Physical Layer
Data Link Layer
- Frame Structure
- Addressing
- Commands
- Memory/Registers
- SyncManager
- FMMU
- Diagnosis

Distributed Clocks
Application Layer
- State Machine

Mailbox
- Mailbox Interface
- EoE Ethernet
- CoE CANopen
- FoE File Access
- SoE Servo Drive

ESI: Device Description
SII: Slave Information /IF
Device Profiles
- Modular Devices
- Drives

Configuration Tool
EtherCAT Master
Standards&Implementation

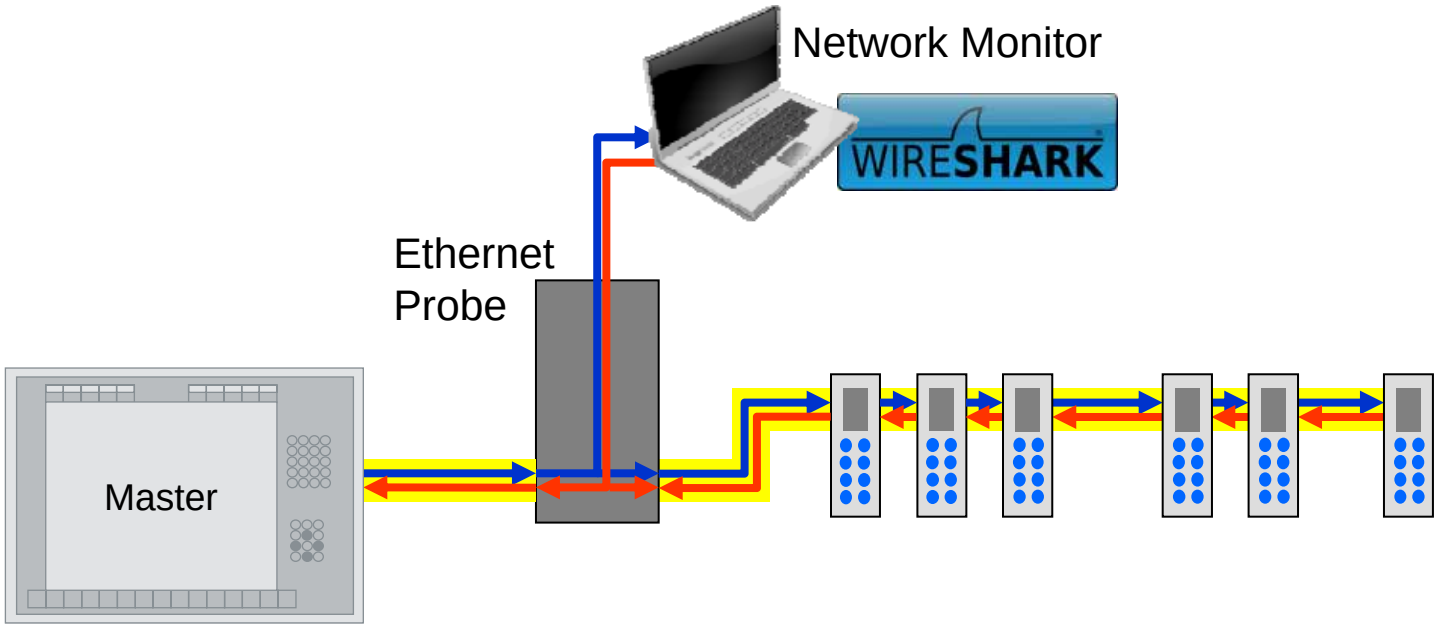

- Masters sends an EtherCAT Frame (broadcast)
  → Monitor gets the 1st copy (unprocessed) with Timestamp
- Frame returns from EtherCAT Slave Devices
  → Monitor gets the 2nd copy (processed) with Timestamp

☑ Real-time performance is not affected (no jitter, no delay)

© EtherCAT Technology Group

Purpose of Distributed Clocks (DC)

EtherCAT Basics
Slave Structure
Device Model (ISO/OSI)
Physical Layer
Data Link Layer
- Frame Structure
- Addressing
- Commands
- Memory/Registers
- SyncManager
- FMMU
- Diagnosis

Distributed Clocks
Application Layer
- State Machine

Mailbox
- Mailbox Interface
- EoE Ethernet
- CoE CANopen
- FoE File Access
- SoE Servo Drive

ESI: Device Description
SII: Slave Information /IF
Device Profiles
- Modular Devices
- Drives

Configuration Tool
EtherCAT Master
Standards&Implementation

- Precise Synchronization (<< 1 µs!) by exact adjustment of Distributed Clocks

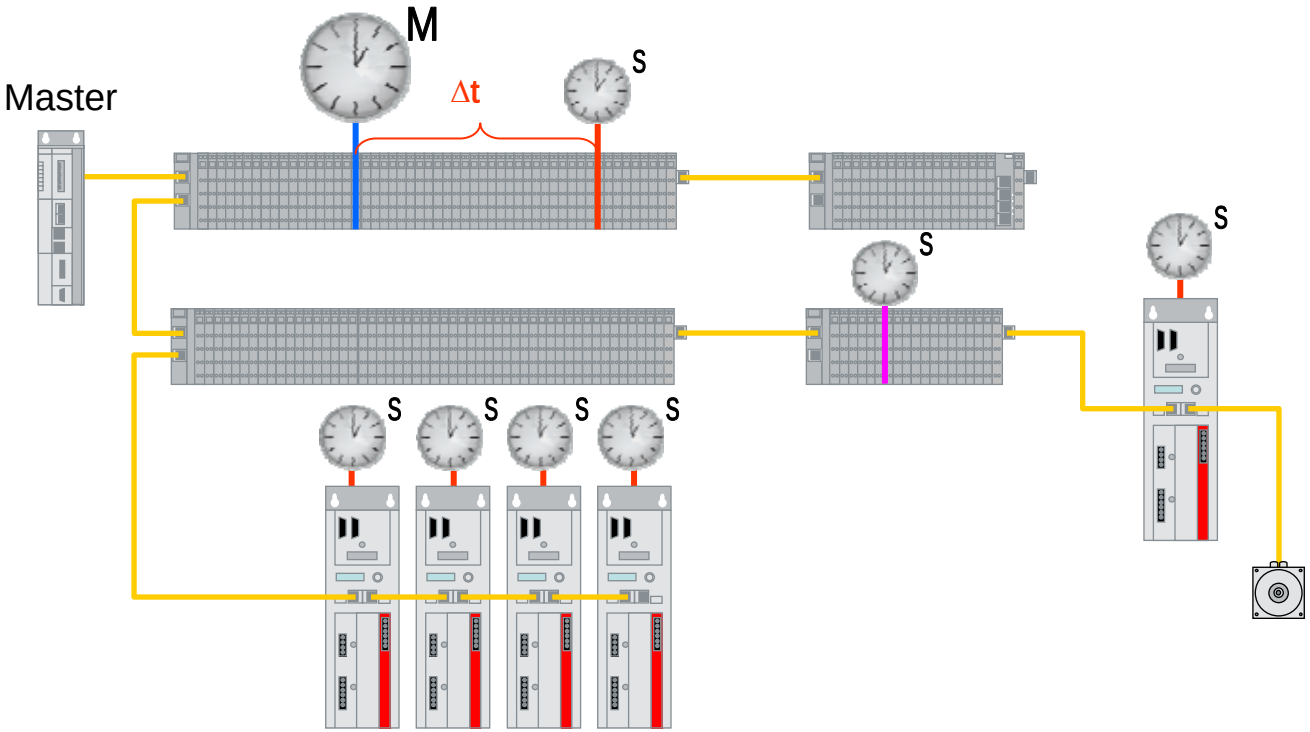

© EtherCAT Technology Group

External Clock Synchronization: IEEE 1588

EtherCAT Basics
Slave Structure
Device Model (ISO/OSI)
Physical Layer
Data Link Layer
- Frame Structure
- Addressing
- Commands
- Memory/Registers
- SyncManager
- FMMU
- Diagnosis

Distributed Clocks
Application Layer
- State Machine

Mailbox
- Mailbox Interface
- EoE Ethernet
- CoE CANopen
- FoE File Access
- SoE Servo Drive

ESI: Device Description
SII: Slave Information /IF
Device Profiles
- Modular Devices
- Drives

Configuration Tool
EtherCAT Master
Standards&Implementation

- Switchport with integrated IEEE 1588 Boundary Clock

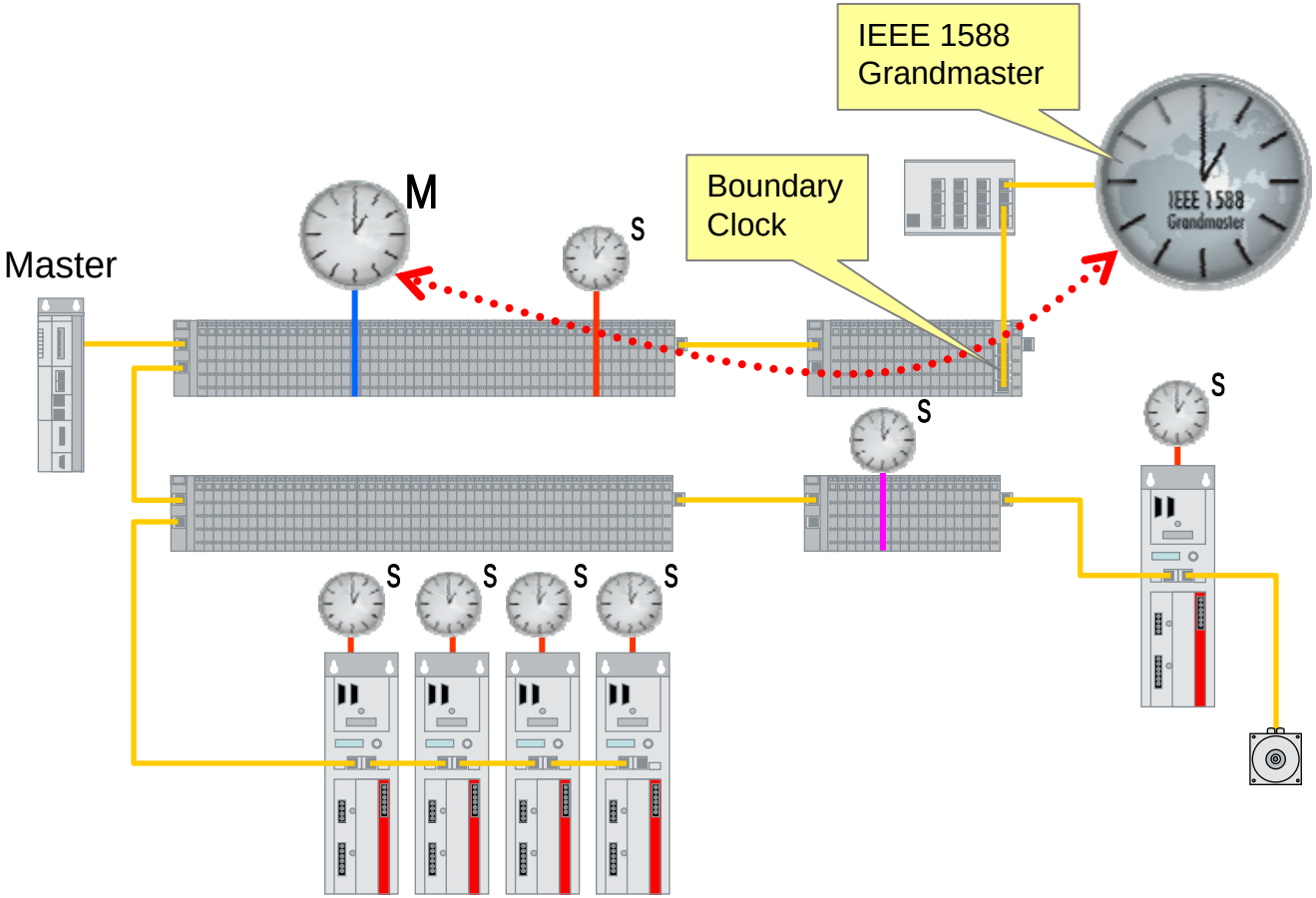

© EtherCAT Technology Group

Distributed Clocks – Features

EtherCAT Basics
Slave Structure
Device Model (ISO/OSI)
Physical Layer
Data Link Layer
Frame Structure
Addressing
Commands
Memory/Registers
SyncManager
FMMU
Diagnosis
Distributed Clocks
Application Layer
State Machine
Mailbox
Mailbox Interface
EoE Ethernet
CoE CANopen
FoE File Access
SoE Servo Drive
ESI: Device Description
SII: Slave Information /IF
Device Profiles
Modular Devices
Drives
Configuration Tool
EtherCAT Master
Standards&Implementation

- Synchronization of EtherCAT devices
- Definition of a System Time
  - Beginning on January, 1st 2000 at 0:00h
  - Base unit is 1 ns
  - 64 bit value (enough for more than 500 years)
  - Lower 32 bits spans over 4.2 seconds
    - Normally enough for communication and time stamping
- Definition of a Reference Clock
  - One EtherCAT Slave will be used as a Reference Clock
  - Reference Clock distributes its Clock cyclically
  - Reference Clock adjustable from a “global” Reference Clock – IEEE 1588

© EtherCAT Technology Group

Distributed Clocks Unit

EtherCAT Basics
Slave Structure
Device Model (ISO/OSI)
Physical Layer
Data Link Layer
- Frame Structure
- Addressing
- Commands
- Memory/Registers
- SyncManager
- FMMU
- Diagnosis

Distributed Clocks
Application Layer
- State Machine

Mailbox
- Mailbox Interface
- EoE Ethernet
- CoE CANopen
- FoE File Access
- SoE Servo Drive

ESI: Device Description
SII: Slave Information /IF
Device Profiles
- Modular Devices
- Drives

Configuration Tool
EtherCAT Master
Standards&Implementation

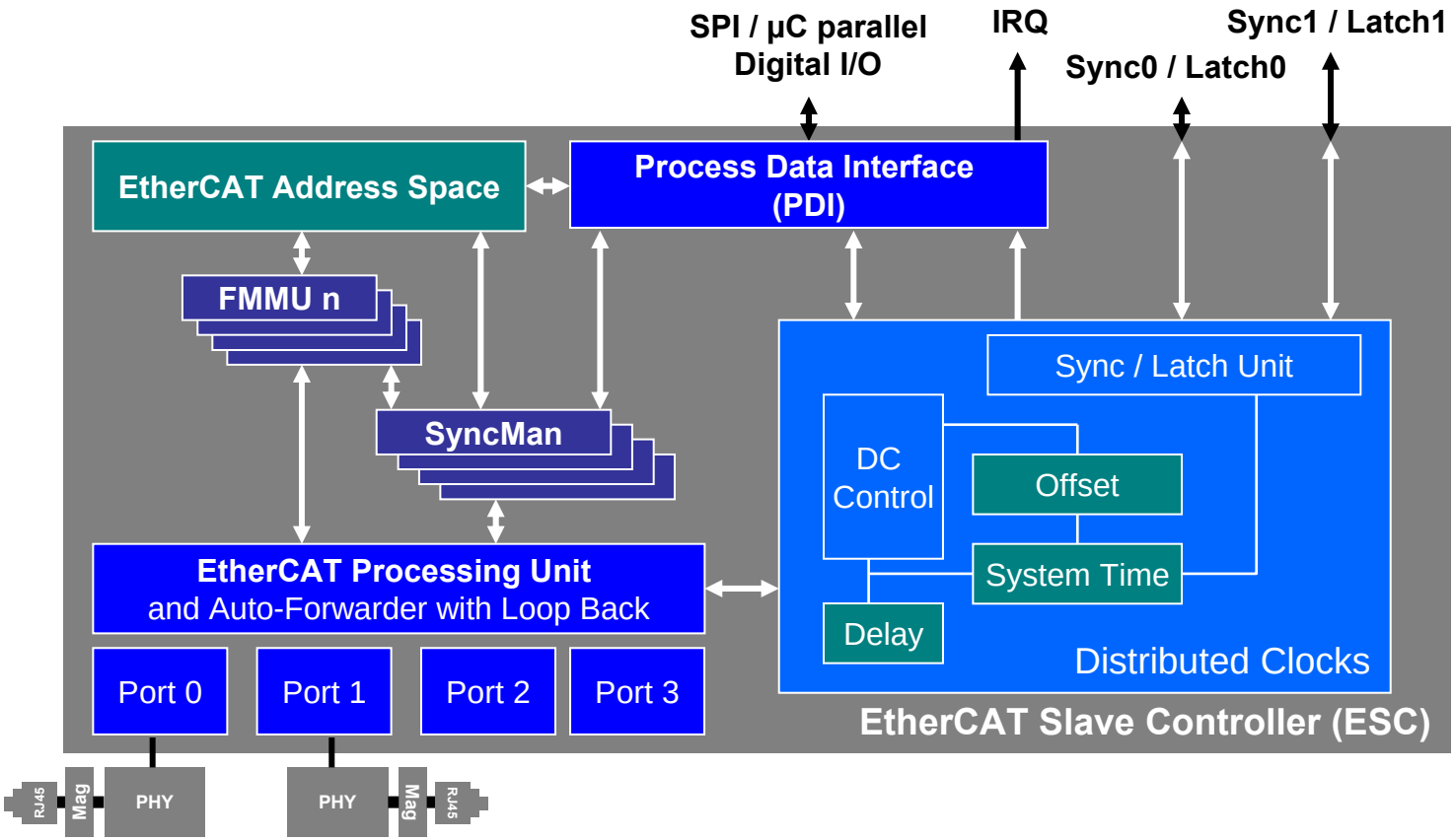

© EtherCAT Technology Group

Features of DC Unit within ESC

EtherCAT Basics
Slave Structure
Device Model (ISO/OSI)
Physical Layer
Data Link Layer
Frame Structure
Addressing
Commands
Memory/Registers
SyncManager
FMMU
Diagnosis
Distributed Clocks
Application Layer
State Machine
Mailbox
Mailbox Interface
EoE Ethernet
CoE CANopen
FoE File Access
SoE Servo Drive
ESI: Device Description
SII: Slave Information /IF
Device Profiles
Modular Devices
Drives
Configuration Tool
EtherCAT Master
Standards&Implementation

- Provider for local time signals
  - Generation of synchronous local output signals (SYNC0, SYNC1 Signals)
  - Generation of synchronous Interrupts
- Synchronous Digital Output updates and Input sampling
- Precise time stamping of input events (Latch unit)

© EtherCAT Technology Group

Features of DC Unit within ESC

EtherCAT Basics
Slave Structure
Device Model (ISO/OSI)
Physical Layer
Data Link Layer
Frame Structure
Addressing
Commands
Memory/Registers
SyncManager
FMMU
Diagnosis
Distributed Clocks
Application Layer
State Machine
Mailbox
Mailbox Interface
EoE Ethernet
CoE CANopen
FoE File Access
SoE Servo Drive
ESI: Device Description
SII: Slave Information /IF
Device Profiles
Modular Devices
Drives
Configuration Tool
EtherCAT Master
Standards&Implementation

- **Propagation delay** measurement support
  - Each EtherCAT slave controller measures the delay between the two directions of a frame
  - Master calculates the propagation delays between all slaves
- **Offset compensation** to Reference Clock
  - Offset between local clock and Reference Clock
  - Same absolute system time in all devices
  - Simultaneousness (clear below 100ns difference) in all devices
- **Drift compensation** to Reference Clock
  - DC Control Unit

© EtherCAT Technology Group

Register System Time

EtherCAT Basics
Slave Structure
Device Model (ISO/OSI)
Physical Layer
Data Link Layer
Frame Structure
Addressing
Commands
Memory/Registers
SyncManager
FMMU
Diagnosis
Distributed Clocks
Application Layer
State Machine
Mailbox
Mailbox Interface
EoE Ethernet
CoE CANopen
FoE File Access
SoE Servo Drive
ESI: Device Description
SII: Slave Information /IF
Device Profiles
Modular Devices
Drives
Configuration Tool
EtherCAT Master
Standards&Implementation

- Registers:
  - *System Time*
    (0x0910:0x0917, small systems 0x0910:0x0913)

- *System Time*
  - Read access from both sides (EtherCAT and µC)
  - Consistent access from µC
    (access to first byte saves an internal copy)
  - Consistent access from EtherCAT
    (within a single frame, internally latched with SOF)
  - Write access from EtherCAT starts the DC control
  - ARMW command (auto increment read – multiple write) allows to read *System Time* of the reference clock and write it to all slave clocks within a single frame

© EtherCAT Technology Group

DC - Propagation Delay Measurement (1)

EtherCAT Basics
Slave Structure
Device Model (ISO/OSI)
Physical Layer
Data Link Layer
- Frame Structure
- Addressing
- Commands
- Memory/Registers
- SyncManager
- FMMU
- Diagnosis

Distributed Clocks
Application Layer
- State Machine

Mailbox
- Mailbox Interface
- EoE Ethernet
- CoE CANopen
- FoE File Access
- SoE Servo Drive

ESI: Device Description
SII: Slave Information /IF
Device Profiles
- Modular Devices
- Drives

Configuration Tool
EtherCAT Master
Standards&Implementation

- EtherCAT Node measures time difference between leaving and returning frame

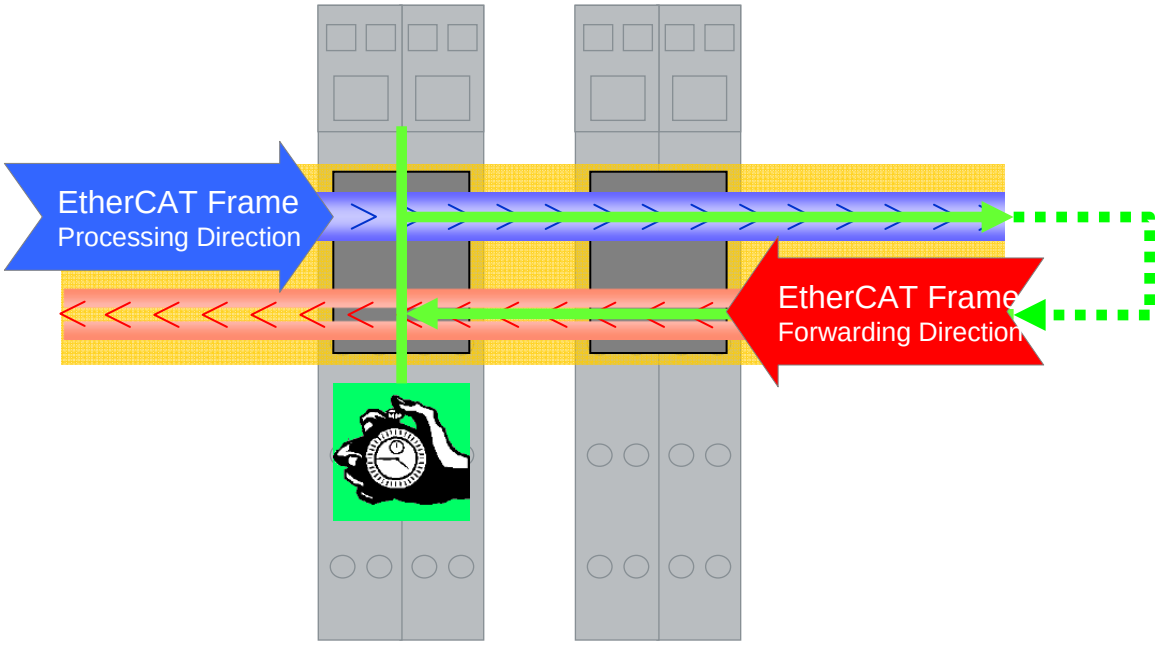

© EtherCAT Technology Group

DC - Propagation Delay Measurement (2)

EtherCAT Basics
Slave Structure
Device Model (ISO/OSI)
Physical Layer
Data Link Layer
- Frame Structure
- Addressing
- Commands
- Memory/Registers
- SyncManager
- FMMU
- Diagnosis

Distributed Clocks
Application Layer
- State Machine

Mailbox
- Mailbox Interface
- EoE Ethernet
- CoE CANopen
- FoE File Access
- SoE Servo Drive

ESI: Device Description
SII: Slave Information /IF
Device Profiles
- Modular Devices
- Drives

Configuration Tool
EtherCAT Master
Standards&Implementation

- EtherCAT Node measures time difference between leaving and returning frame

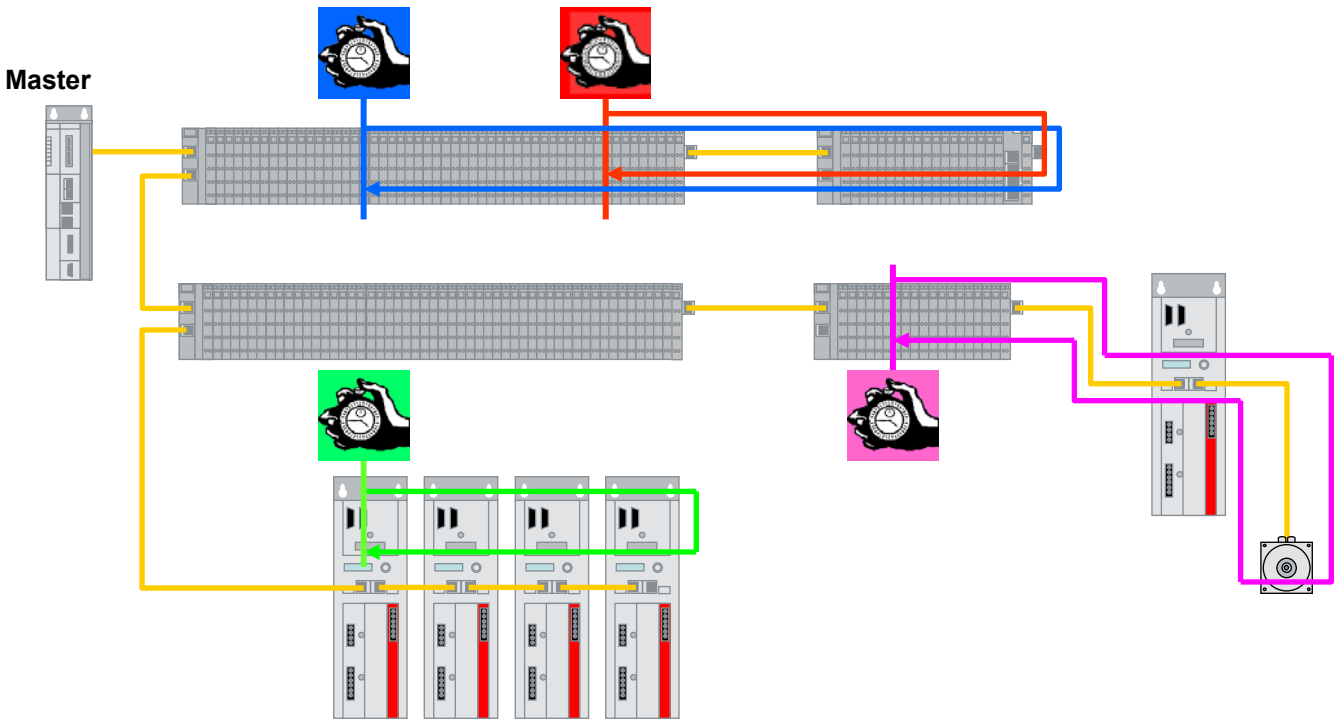

© EtherCAT Technology Group

Propagation Delay Measurement

EtherCAT Basics
Slave Structure
Device Model (ISO/OSI)
Physical Layer
Data Link Layer
Frame Structure
Addressing
Commands
Memory/Registers
SyncManager
FMMU
Diagnosis
Distributed Clocks
Application Layer
State Machine
Mailbox
Mailbox Interface
EoE Ethernet
CoE CANopen
FoE File Access
SoE Servo Drive
ESI: Device Description
SII: Slave Information /IF
Device Profiles
Modular Devices
Drives
Configuration Tool
EtherCAT Master
Standards&Implementation

- <u>Registers:</u>
  - *Receive Time Port 0* (0x0900:0x0903)
  - *Receive Time Port 1* (0x0904:0x0907)
  - *Receive Time Port 2* (0x0908:0x090B)
  - *Receive Time Port 3* (0x090C:0x090F)
  - *System Time Delay* (0x0928:0x092B)

- Write access to *Receive Time Port 0* activates latch
  - Latch local time of SOF (Start of Frame)
  - At EOF (End of Frame) SOF time is copied to *Receive Time Port X*
- *Receive Time Port X* in local clock units (controlled)
- SOF time of all frames are latched on all ports internally
- Master reads all time stamps and calculates the delay times with respect to the topology.
- Individual delay time is written to register *System Time Delay*

© EtherCAT Technology Group

Offset and Drift Compensation

EtherCAT Basics
Slave Structure
Device Model (ISO/OSI)
Physical Layer
Data Link Layer
- Frame Structure
- Addressing
- Commands
- Memory/Registers
- SyncManager
- FMMU
- Diagnosis

Distributed Clocks
Application Layer
- State Machine

Mailbox
- Mailbox Interface
- EoE Ethernet
- CoE CANopen
- FoE File Access
- SoE Servo Drive

ESI: Device Description
SII: Slave Information /IF
Device Profiles
- Modular Devices
- Drives

Configuration Tool
EtherCAT Master
Standards&Implementation

- Same System Time in all devices

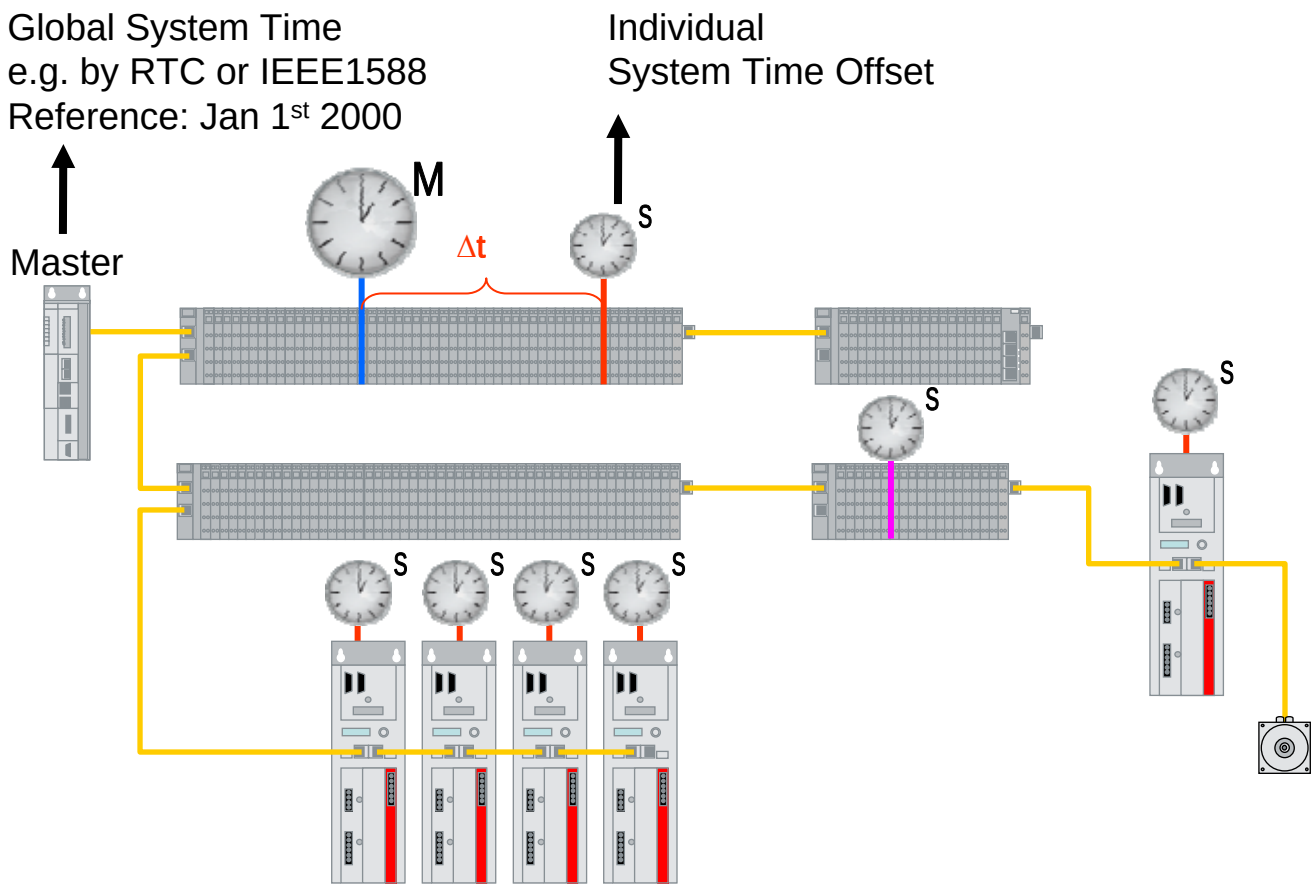

© EtherCAT Technology Group

Offset Compensation

EtherCAT Basics
Slave Structure
Device Model (ISO/OSI)
Physical Layer
Data Link Layer
Frame Structure
Addressing
Commands
Memory/Registers
SyncManager
FMMU
Diagnosis
Distributed Clocks
Application Layer
State Machine
Mailbox
Mailbox Interface
EoE Ethernet
CoE CANopen
FoE File Access
SoE Servo Drive
ESI: Device Description
SII: Slave Information /IF
Device Profiles
Modular Devices
Drives
Configuration Tool
EtherCAT Master
Standards&Implementation

- <u>Registers:</u>
  - *System Time Offset*
    (0x0920:0x927, small systems 0x0920:0x0923)

- Difference between the Reference Clock and every slave device's clock is calculated by the master.
- The offset time is written to register *System Time Offset*
- Each slave calculates its local copy of the System time using its local time and the local offset value:
  - $t_{\text{Local copy of System Time}} = t_{\text{Local time}} + t_{\text{Offset}}$

© EtherCAT Technology Group

Drift Compensation – DC Control

EtherCAT Basics
Slave Structure
Device Model (ISO/OSI)
Physical Layer
Data Link Layer
Frame Structure
Addressing
Commands
Memory/Registers
SyncManager
FMMU
Diagnosis
Distributed Clocks
Application Layer
State Machine
Mailbox
Mailbox Interface
EoE Ethernet
CoE CANopen
FoE File Access
SoE Servo Drive
ESI: Device Description
SII: Slave Information /IF
Device Profiles
Modular Devices
Drives
Configuration Tool
EtherCAT Master
Standards&Implementation

- Registers:
  - System Time (0x0910:0x0917, small systems 0x0910:0x0913)
  - System Time Offset (0x0920:0x927, small systems 0x0920:0x0923)

- ARMW command (auto increment read – multiple write) allows to read *System Time* of the reference clock and write it to all slave clocks within a single frame

- DC Control
  - Write access to *System Time* compares received Time with local time

    $$\Delta t = (t_{\text{Local time}} + t_{\text{Offset}} - t_{\text{PropagationDelay}}) - t_{\text{Received Time}}$$

  - If ($\Delta t > 0$) then decelerate local clock else if ($\Delta t < 0$) accelerate local clock

© EtherCAT Technology Group

Initialization of DCs

EtherCAT Basics
Slave Structure
Device Model (ISO/OSI)
Physical Layer
Data Link Layer
Frame Structure
Addressing
Commands
Memory/Registers
SyncManager
FMMU
Diagnosis
Distributed Clocks
Application Layer
State Machine
Mailbox
Mailbox Interface
EoE Ethernet
CoE CANopen
FoE File Access
SoE Servo Drive
ESI: Device Description
SII: Slave Information /IF
Device Profiles
Modular Devices
Drives
Configuration Tool
EtherCAT Master
Standards&Implementation

- **Initialization <u>with</u> Propagation Delay compensation**

1. Master reads the DL Status register of all slaves and calculates the network topology.
2. Master sends a broadcast write to Receive Time Port 0 register (at least first byte). All slaves latch the local time of the first preamble bit of this frame at all ports and at the ECAT Processing Unit. Some ESCs need the EtherCAT network to be free of frames before the broadcast write is sent.
3. Master waits until the broadcast write frame has returned.
4. Master reads all Receive Time Port 0-3 registers (depending on the topology and the Receive Time ECAT Processing Unit register (0x0918:0x091F) which contains the upper 32 bits of the receive times.
5. Master calculates individual propagation delays and writes them to System Time Delay registers of the slaves. Possible overruns of the 32 bit Receive Times have to be checked and taken into account.
6. Master sets System Time Offset register of the Reference Clock so that the Reference Clock is bound to the master time. The offset for the Reference Clock is master time minus Receive Time ECAT Processing Unit (local time) of the Reference Clock.
7. Master calculates System Time offsets for all DC slaves and writes them to the System Time Offset registers. The offset of each slave is Receive Time ECAT Processing Unit from Reference Clock minus Receive Time ECAT Processing Unit from each DC slave.
8. For static drift compensation, the master sends many separate ARMW or FRMW drift compensation frames (e.g., 15,000 frames) to distribute the System Time of the Reference Clock to all DC slaves.
9. For dynamic drift compensation, the master sends ARMW or FRMW commands periodically to distribute the System Time of the Reference Clock to all DC slaves. The rate of the drift compensation commands depends on the acceptable maximum deviation.

© EtherCAT Technology Group

SyncSignal Generation

EtherCAT Basics
Slave Structure
Device Model (ISO/OSI)
Physical Layer
Data Link Layer
Frame Structure
Addressing
Commands
Memory/Registers
SyncManager
FMMU
Diagnosis
Distributed Clocks
Application Layer
State Machine
Mailbox
Mailbox Interface
EoE Ethernet
CoE CANopen
FoE File Access
SoE Servo Drive
ESI: Device Description
SII: Slave Information /IF
Device Profiles
Modular Devices
Drives
Configuration Tool
EtherCAT Master
Standards&Implementation

- Output of the Sync unit can be used for
  - Interrupt generation
  - PDI Digital Output Update events
- Can be mapped to
  - *AL Event Request* Register for PDI IRQ
  - SYNC0 and SYNC1

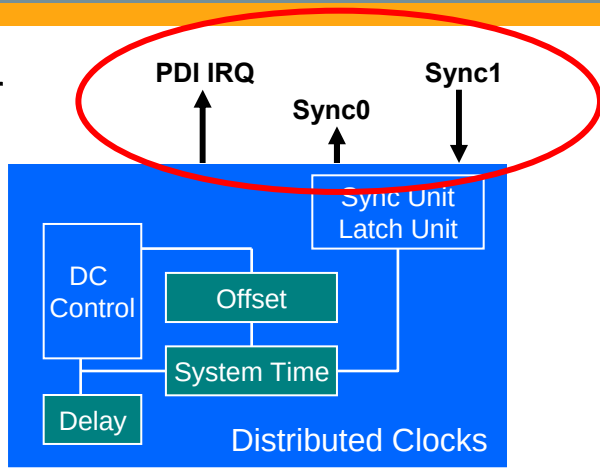

- SyncSignals can be generated at a specific System Time
- Four Operation modes are supported:
  - Cyclic generation
  - Single shot
  - Cyclic acknowledge
  - Single shot acknowledge
- The second SyncSignal (SYNC1) depends on SYNC0, it can be generated with a predefined delay after SYNC0 pulses
- Initiated alternatively from the EtherCAT master or slave application side

© EtherCAT Technology Group

Registers for SyncSignal Generation

EtherCAT Basics
Slave Structure
Device Model (ISO/OSI)
Physical Layer
Data Link Layer
Frame Structure
Addressing
Commands
Memory/Registers
SyncManager
FMMU
Diagnosis
Distributed Clocks
Application Layer
State Machine
Mailbox
Mailbox Interface
EoE Ethernet
CoE CANopen
FoE File Access
SoE Servo Drive
ESI: Device Description
SII: Slave Information /IF
Device Profiles
Modular Devices
Drives
Configuration Tool
EtherCAT Master
Standards&Implementation

Register Address	Name	Description
0x0140[11:10]	PDI Control	Enable/Disable DC Units (power saving)
0x0151	Sync/Latch PDI Configuration	Configuration of SYNC/LATCH[1:0] pins
0x0980.0	Cyclic Unit Control	Assignment of cyclic function to EtherCAT or PDI
0x0981	Activation	Activation of cyclic function and SYNC pins
0x0982:0x0983	Pulse Length of SYNC signals	Length of SYNC impulse length
0x098E	SYNC0 Status	Status of SYNC0 signal
0x098F	SYNC1Status	Status of SYNC1 signal
0x0990:0y0997	SYNC0 Start Time	Start Time of cyclic operation
0x0998:0x099F	NEXT SYNC1 Pulse	Next Sync1 Pulse
0x09A:0x09A3	SYNC0 Cycle Time	Cycle Time of SYNC0
0x09A4:0x09A7	SYNC1 Cycle Time	Cycle Time of SYNC1

© EtherCAT Technology Group

SYNC0 Signal Generation modes

EtherCAT Basics
Slave Structure
Device Model (ISO/OSI)
Physical Layer
Data Link Layer
Frame Structure
Addressing
Commands
Memory/Registers
SyncManager
FMMU
Diagnosis
Distributed Clocks
Application Layer
State Machine
Mailbox
Mailbox Interface
EoE Ethernet
CoE CANopen
FoE File Access
SoE Servo Drive
ESI: Device Description
SII: Slave Information /IF
Device Profiles
Modular Devices
Drives
Configuration Tool
EtherCAT Master
Standards&Implementation

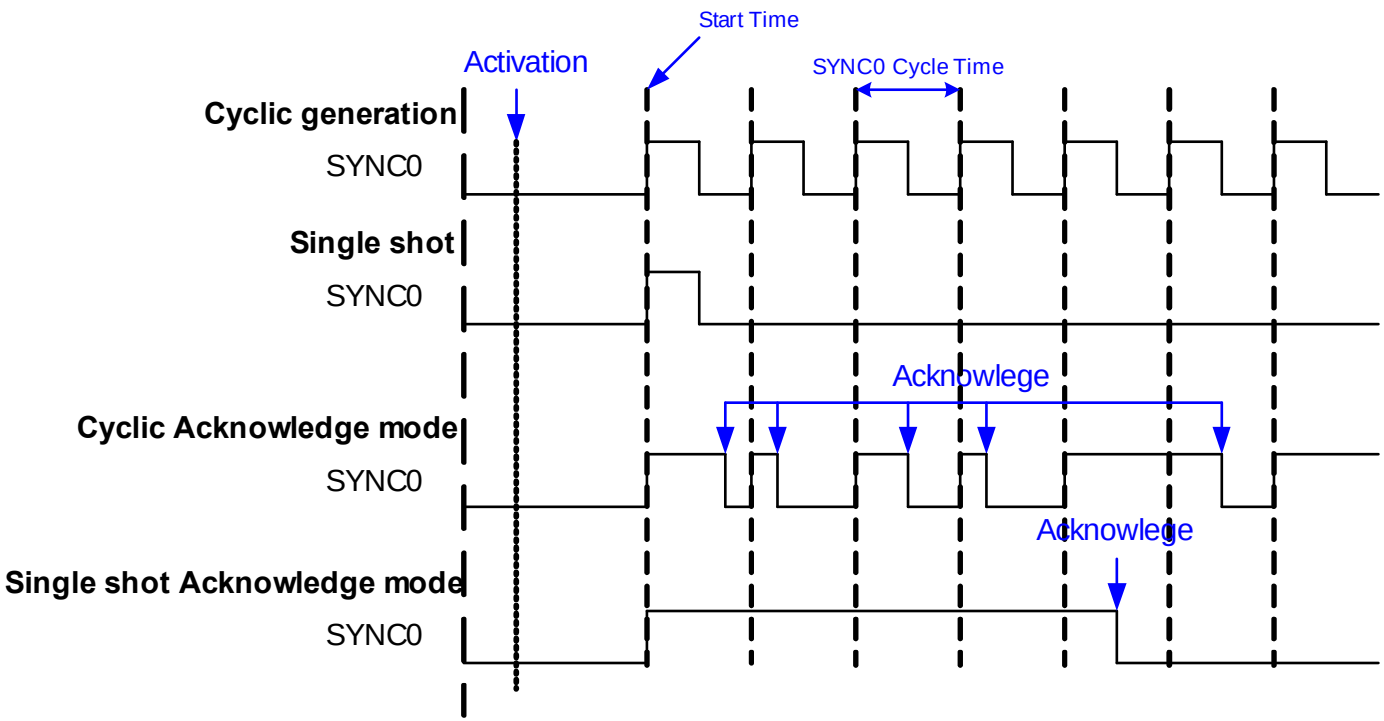

Pulse Length of SYNC Signals (0x0982:0x0983)	SYNC0 Cycle Time (0x09A0:0x09A3)	
	> 0	= 0
> 0	Cyclic generation	Single Shot
= 0	Cyclic Acknowledge*	Single Shot Acknowledge*

* Acknowledge by reading SYNC status register (0x098E, 0x098F)

© EtherCAT Technology Group

SYNC1 Signal Generation modes

EtherCAT Basics
Slave Structure
Device Model (ISO/OSI)
Physical Layer
Data Link Layer
- Frame Structure
- Addressing
- Commands
- Memory/Registers
- SyncManager
- FMMU
- Diagnosis

Distributed Clocks
Application Layer
- State Machine

Mailbox
- Mailbox Interface
- EoE Ethernet
- CoE CANopen
- FoE File Access
- SoE Servo Drive

ESI: Device Description
SII: Slave Information /IF
Device Profiles
- Modular Devices
- Drives

Configuration Tool
EtherCAT Master
Standards&Implementation

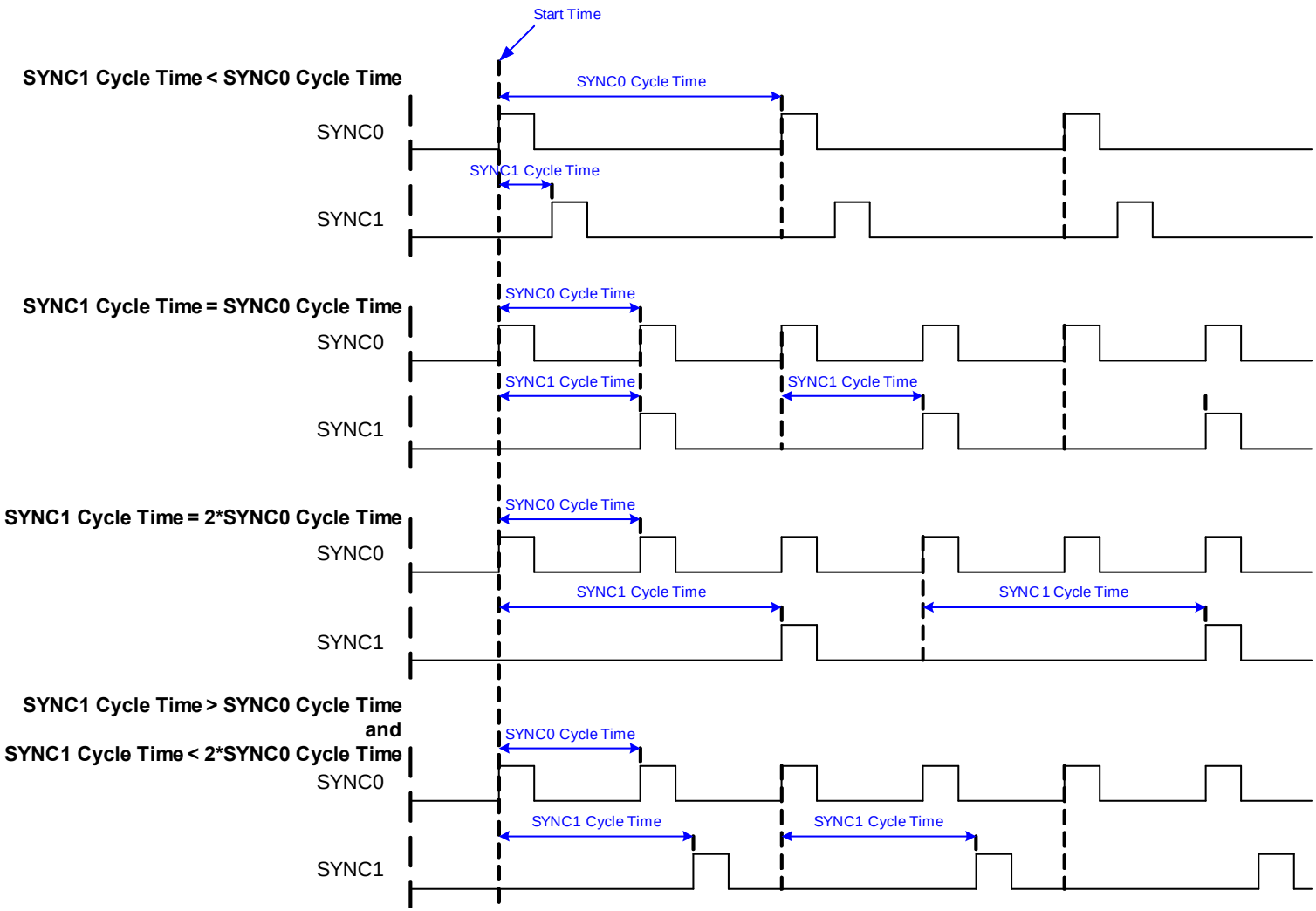

© EtherCAT Technology Group

Latch Functionality

EtherCAT Basics
Slave Structure
Device Model (ISO/OSI)
Physical Layer
Data Link Layer
Frame Structure
Addressing
Commands
Memory/Registers
SyncManager
FMMU
Diagnosis
Distributed Clocks
Application Layer
State Machine
Mailbox
Mailbox Interface
EoE Ethernet
CoE CANopen
FoE File Access
SoE Servo Drive
ESI: Device Description
SII: Slave Information /IF
Device Profiles
Modular Devices
Drives
Configuration Tool
EtherCAT Master
Standards&Implementation

- The Latch Event unit supports time stamping of the system time with two independent input signals
  - LATCH0 and LATCH1 input signals are used
    (can be the same pins as for SYNC0 and SYNC1, ESC dependents)
  - Time Stamping of SyncManager events is possible
- Latch on positive and/or negative edge
- Single or continuous latch configurable
- The *Latch Time* register (0x09B0:0x09CF) contain the time stamps
  - Acknowledge by reading the *Latch Time* register.

© EtherCAT Technology Group

Registers for Latch Input Events

EtherCAT Basics
Slave Structure
Device Model (ISO/OSI)
Physical Layer
Data Link Layer
Frame Structure
Addressing
Commands
Memory/Registers
SyncManager
FMMU
Diagnosis
Distributed Clocks
Application Layer
State Machine
Mailbox
Mailbox Interface
EoE Ethernet
CoE CANopen
FoE File Access
SoE Servo Drive
ESI: Device Description
SII: Slave Information /IF
Device Profiles
Modular Devices
Drives
Configuration Tool
EtherCAT Master
Standards&Implementation

Register Address	Name	Description
0x0140[11:10]	PDI Control	Enable/Disable DC Units (power saving)
0x0151	Sync/Latch PDI Configuration	Configuration of SYNC/LATCH[1:0] pins
0x0980[5:4]	Cyclic Unit Control	Assignment of cyclic function to EtherCAT or PDI
0x09A8	Latch0 Control	Latch unit configuration for Latch0
0x09A9	Latch1 Control	Latch unit configuration for Latch1
0x09AE	Latch0 Status	Latch status of Latch0
0x09AF	Latch1 Status	Latch status Latch1
0x09B0:0x09B7	Latch0 Time Positive Edge	Time stamp positive edge Latch0
0x09B8:0x09BF	Latch0 Time Negative Edge	Time stamp negative edge Latch0
0x09C0:0x09C7	Latch1 Time Positive Edge	Time stamp positive edge Latch1
0x09C8:0x09CF	Latch1 Time Negative Edge	Time stamp negative edge Latch1
0x09F0:0x09F3	EtherCAT Buffer Change Event Time	Time stamp for ECAT SyncManager buffer change event
0x09F8:0x09FB	PDI Buffer Start Event Time	Time stamp for PDI SyncManager buffer start event
0x09FC:0x09FF	PDI Buffer Change Event Time	Time stamp for PDI SyncManager buffer change event

© EtherCAT Technology Group

Synchronization Modes

EtherCAT Basics
Slave Structure
Device Model (ISO/OSI)
Physical Layer
Data Link Layer
Frame Structure
Addressing
Commands
Memory/Registers
SyncManager
FMMU
Diagnosis
Distributed Clocks
Application Layer
State Machine
Mailbox
Mailbox Interface
EoE Ethernet
CoE CANopen
FoE File Access
SoE Servo Drive
ESI: Device Description
SII: Slave Information /IF
Device Profiles
Modular Devices
Drives
Configuration Tool
EtherCAT Master
Standards&Implementation

- Definition of a unique behavior of EtherCAT devices (Master and Slaves) for synchronized applications
- Synchronization modes
  - Free Run
  - Synchronization with SyncManager Event, i.e. receipt of the telegram
  - Synchronization with Distributed Clocks

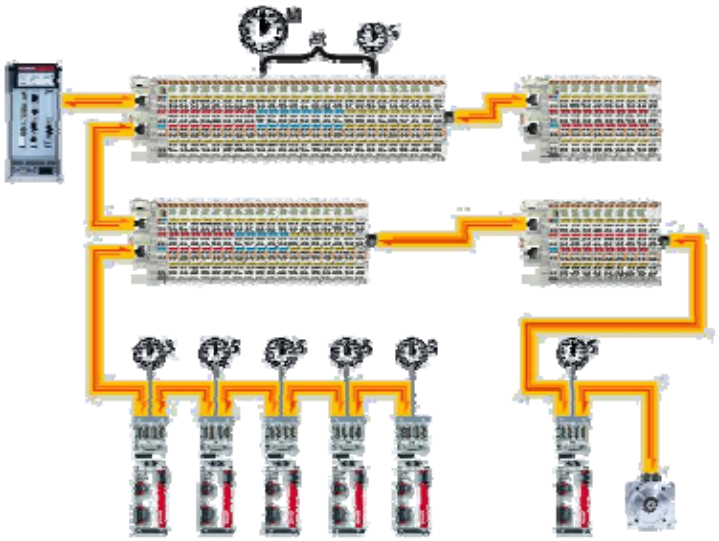

© EtherCAT Technology Group

Synchronization Modes

EtherCAT Basics
Slave Structure
Device Model (ISO/OSI)
Physical Layer
Data Link Layer
Frame Structure
Addressing
Commands
Memory/Registers
SyncManager
FMMU
Diagnosis
Distributed Clocks
Application Layer
State Machine
Mailbox
Mailbox Interface
EoE Ethernet
CoE CANopen
FoE File Access
SoE Servo Drive
ESI: Device Description
SII: Slave Information /IF
Device Profiles
Modular Devices
Drives
Configuration Tool
EtherCAT Master
Standards&Implementation

1. Free Run
2. Synchronous to SM2/3 (with Shift)
3. DC Mode 1 (Sync0 Event)
4. DC Mode 1 (Sync0 Event with Shift)
5. DC Mode 2 (Sync0, Sync1, with Shift)
6. DC Mode 3 (SM2 Event, Sync0)
7. DC Mode 4 (SM2 Event, Sync0, Sync1)
8. DC Mode with subordinated cycles

© EtherCAT Technology Group

Free Run

Local Timer

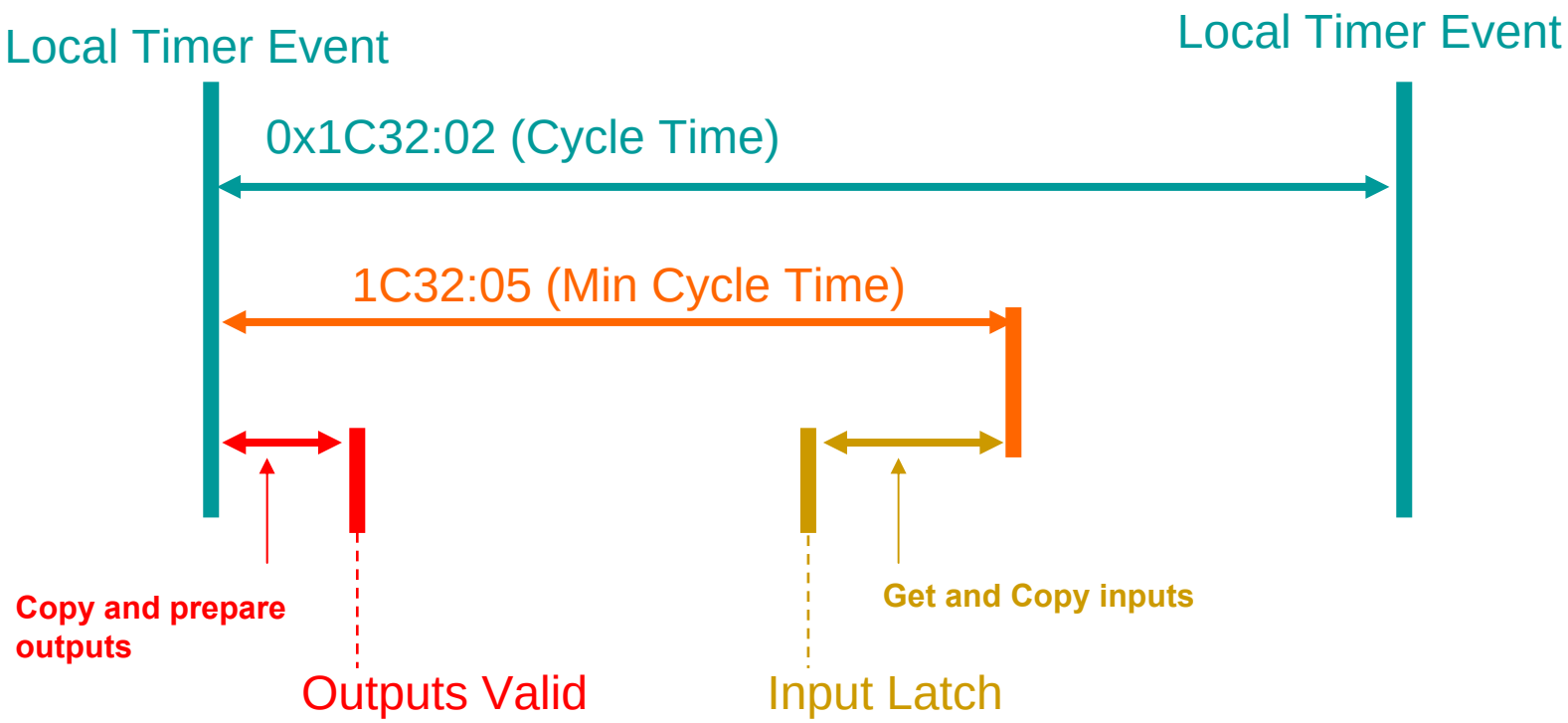

© EtherCAT Technology Group

Synchronous with SM2/3

SM-Event

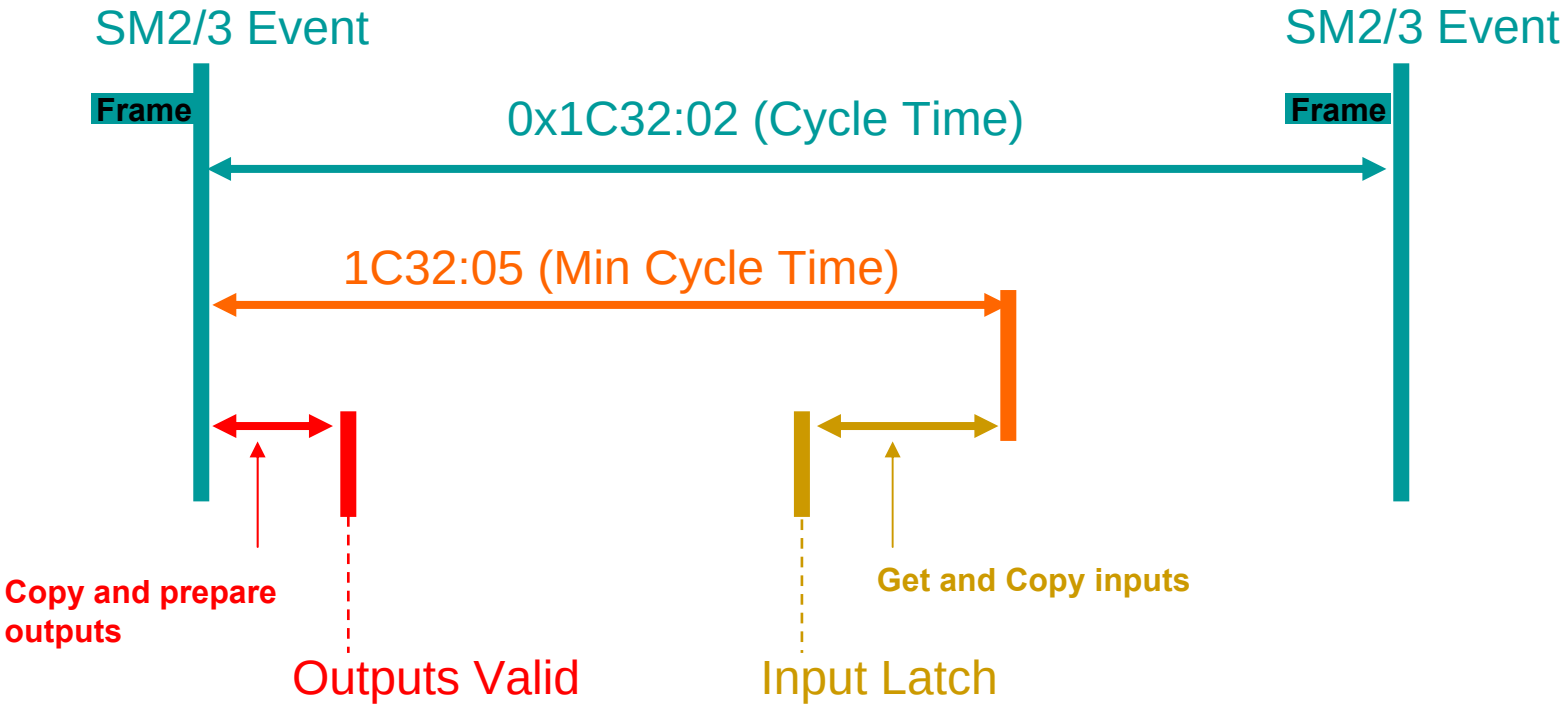

© EtherCAT Technology Group

Synchronous with SM2/3

SM Event (Shift of Input Latch)

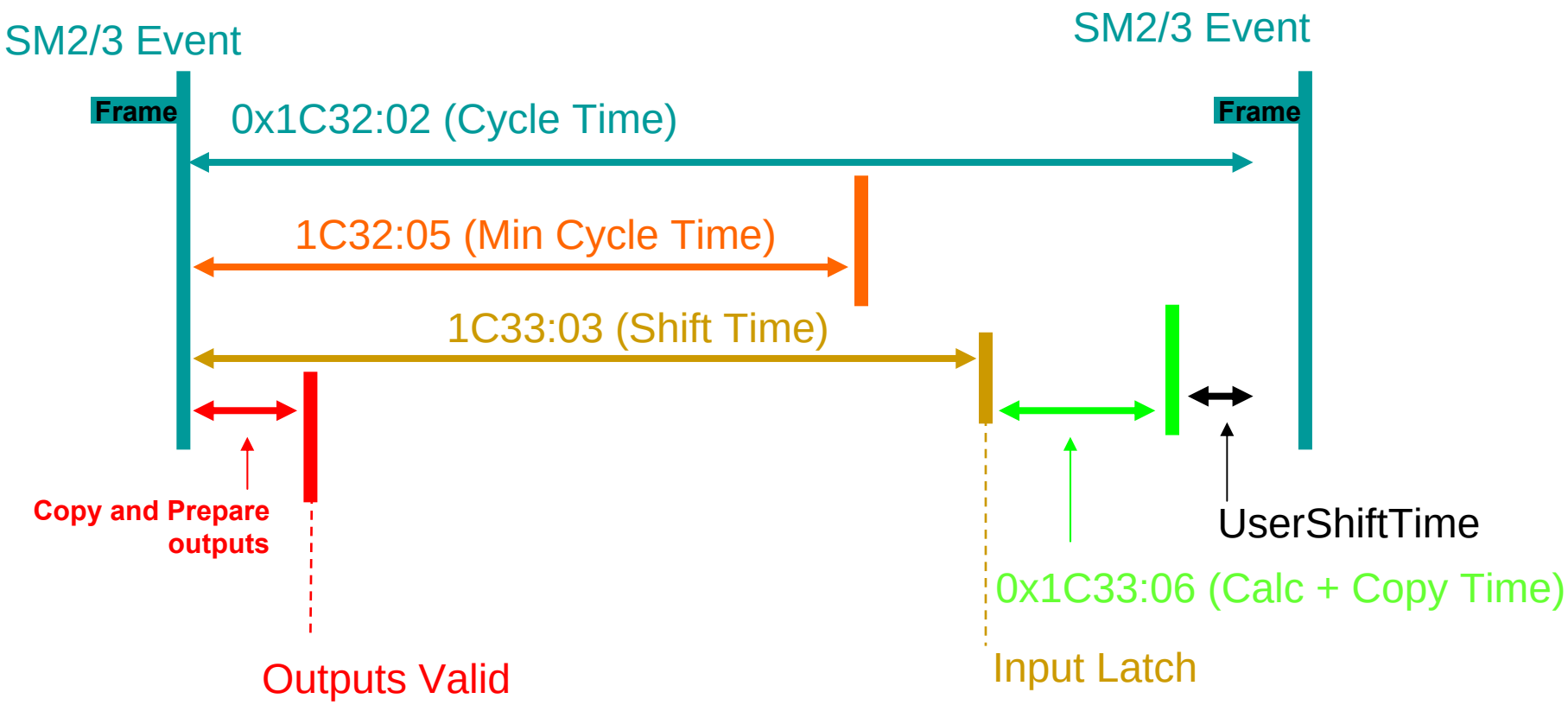

© EtherCAT Technology Group

Timing Parameter for DC Mode

Output Calc+Copy Time (RO):
- Minimum time between trigger event (SM or SYNC0) and sync event (SYNC0 or SYNC1)

Output Delay Time (RO):
- Time between sync event (SYNC0 or SYNC1) and Outputs Valid

Output Shift Time (RO/RW):
- Time between SYNC0 event and Outputs Valid
- Outputs Valid could be delayed by writing this time

Input Delay Time (RO, if Input Latch is triggered by SYNC0 or SYNC1):
-Time between sync event (SYNC0 or SYNC1) and Input Latch

Input Calc+Copy Time (RO):
- Time between input latch and data availability for the master

Input Shift Time (RO/RW):
- Time between SYNC0 event and Input Latch
- Input Latch could be delayed by writing this time

© EtherCAT Technology Group

DC Mode 1

Sync0 Event

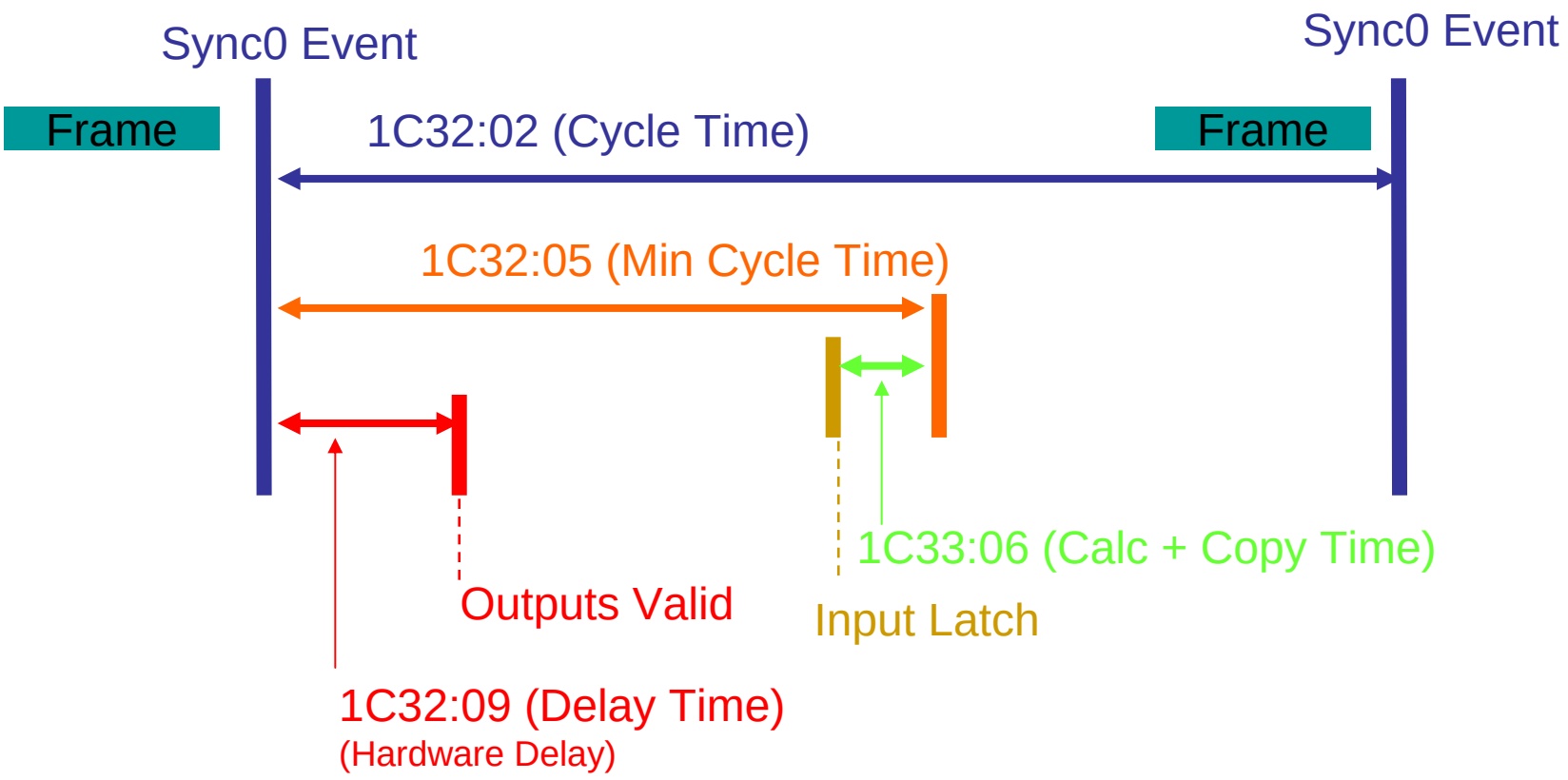

- **Frame has to be received before Sync0 Event is generated**
- **Sync0 Cycle Time has to be greater than the value of 0x1C32:05**
- **0x1C32:01 = 0x1C33:01 = 2, 0x1C32:06 = 0, 0x1C33:09 = 0**

© EtherCAT Technology Group

DC Mode 1

Sync0 Event (Shift of Outputs Valid and/or Input Latch)

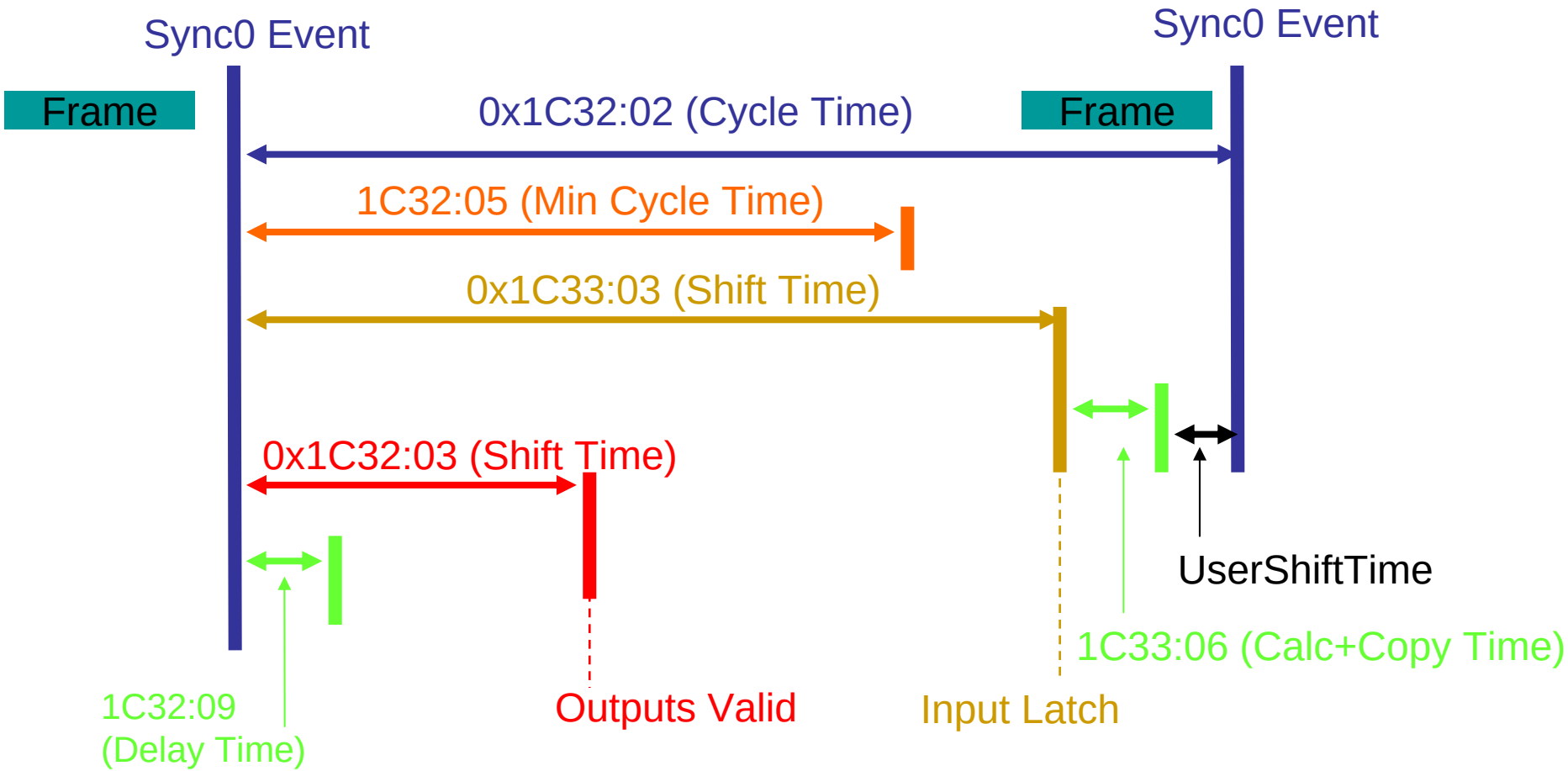

- **Output Shift Time 0x1C32:03 has to be greater than the value of 0x1C32:06**
- **Input Shift Time 0x1C33:03 has to be greater than 0x1C32:05-0x1C33:06**
- **Input Shift Time 0x1C33:03 has to be smaller than Sync0 Cycle Time-UserShiftTime-0x1C33:06**

© EtherCAT Technology Group

DC Mode 2

Sync0 Event, Sync1 Event

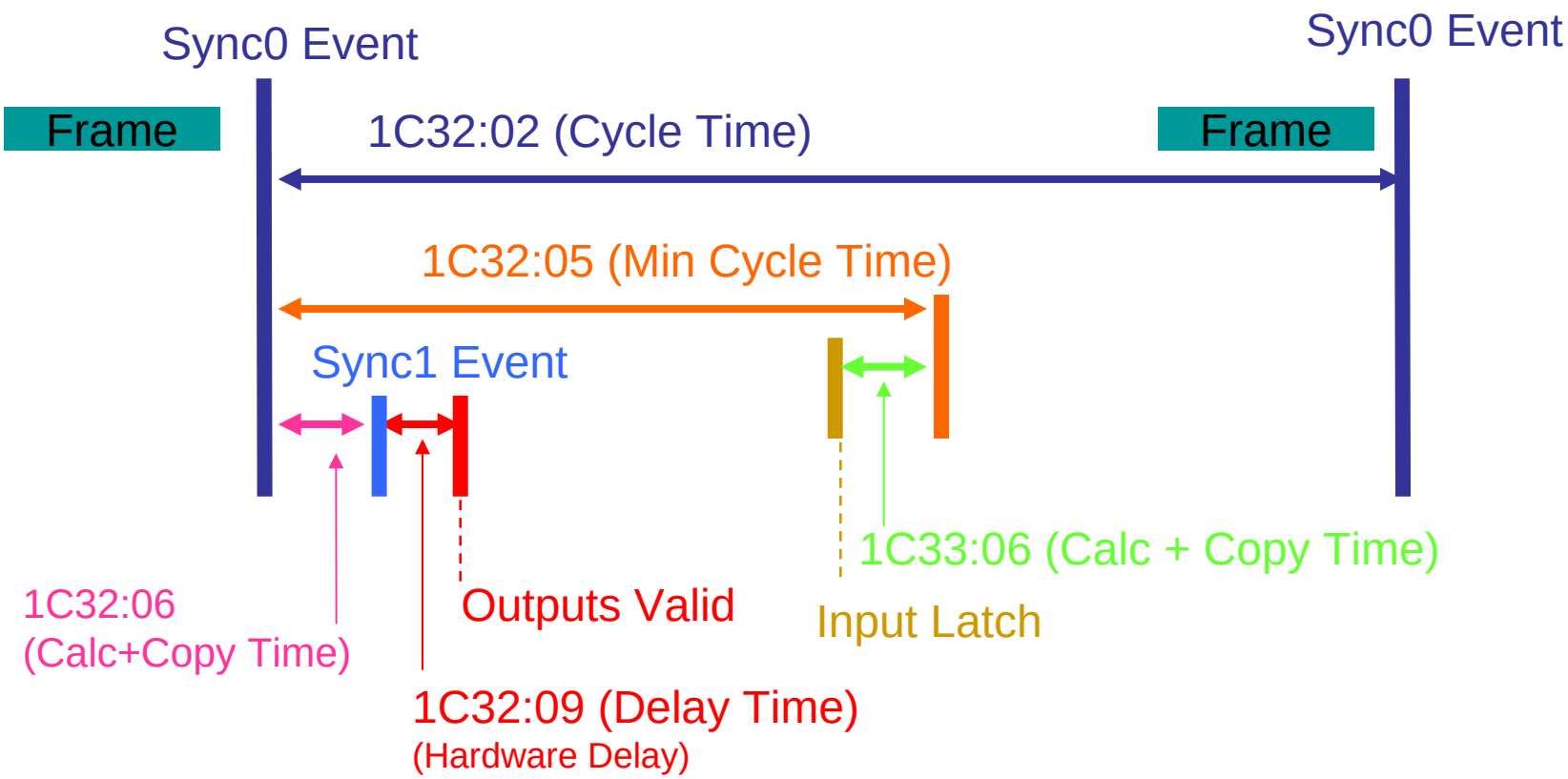

- **Frame has to be received before Sync0 Event is generated**
- **Sync0 Cycle Time has to be greater than the value of 0x1C32:05**
- **Shift between SYNC0 and SYNC1 event has to be at least the value of 0x1C32:06**
- **0x1C32:01 = 0x1C33:01 = 3, 0x1C33:09 = 0**

© EtherCAT Technology Group

DC Mode 3

SM-Event, Sync0 Event

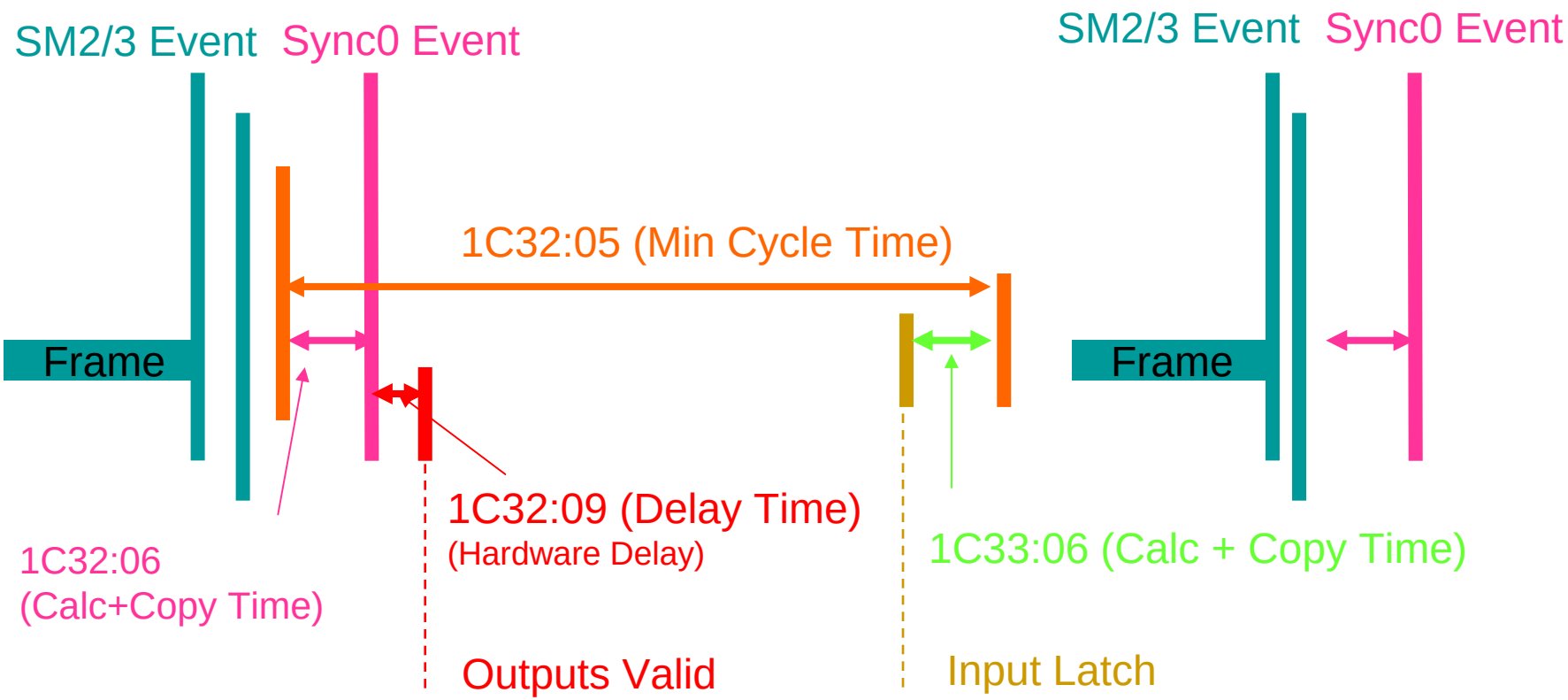

- **Frame has to received at least the value of 0x1C32:06 before Sync0 Event is generated**
- **Sync0 Cycle Time has to be greater than the value of 0x1C32:05**
- **0x1C32:01 = 0x1C33:01 = 2, 0x1C33:09 = 0**

© EtherCAT Technology Group

DC Mode 4

SM-Event, Sync0 Event, Sync1 Event

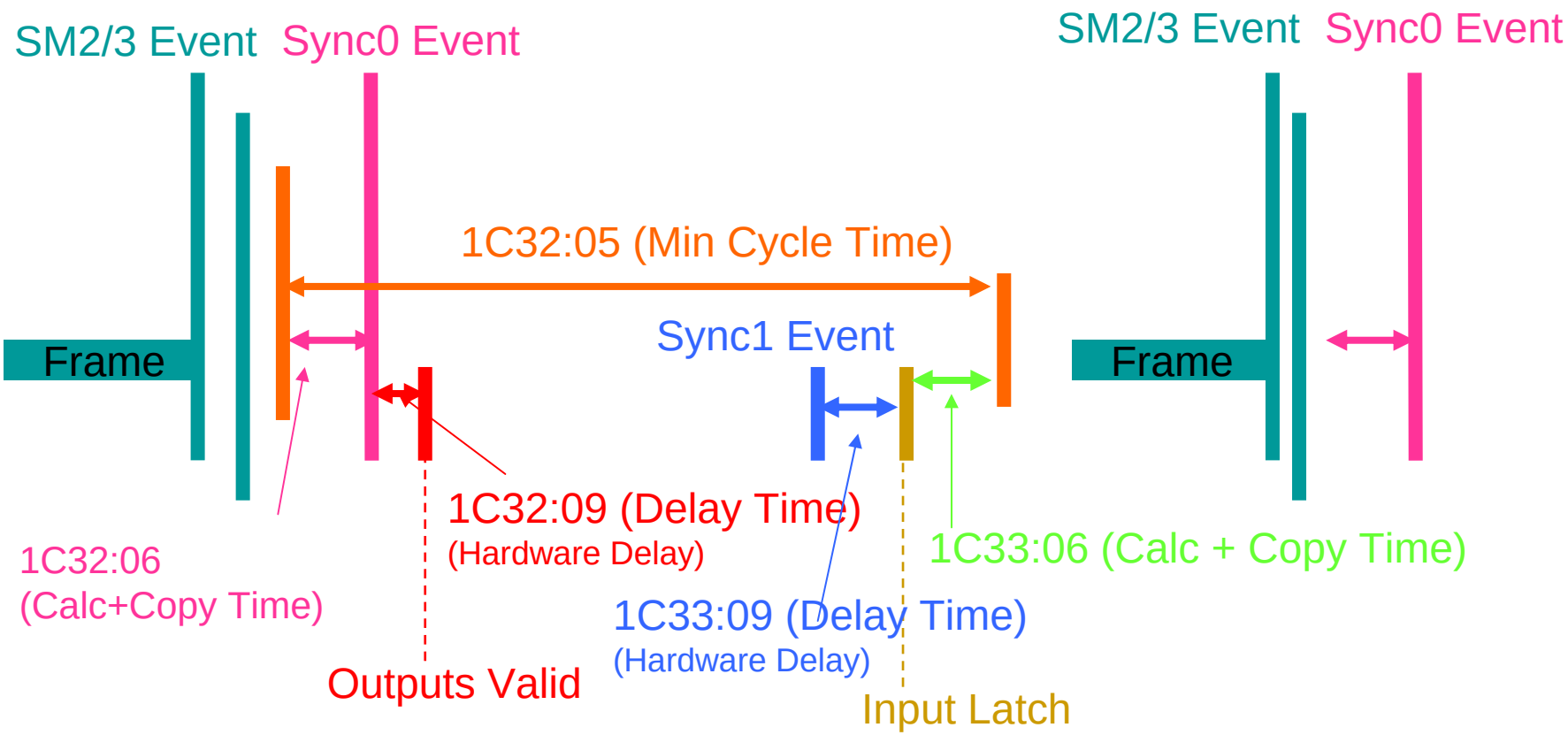

- **Frame has to received at least the value of 0x1C32:06 before Sync0 Event is generated**
- **Sync0 Cycle Time has to be greater than the value of 0x1C32:05**
- **Shift between SYNC0 and SYNC1 has to be at least 0x1C32:05-0x1C32:06-0x1C33:06-0x1C33:09**
- **0x1C32:01 = 2, 0x1C33:01 = 3**

© EtherCAT Technology Group

DC Mode subordinated cycles

Sync0 Event, Sync1 Event

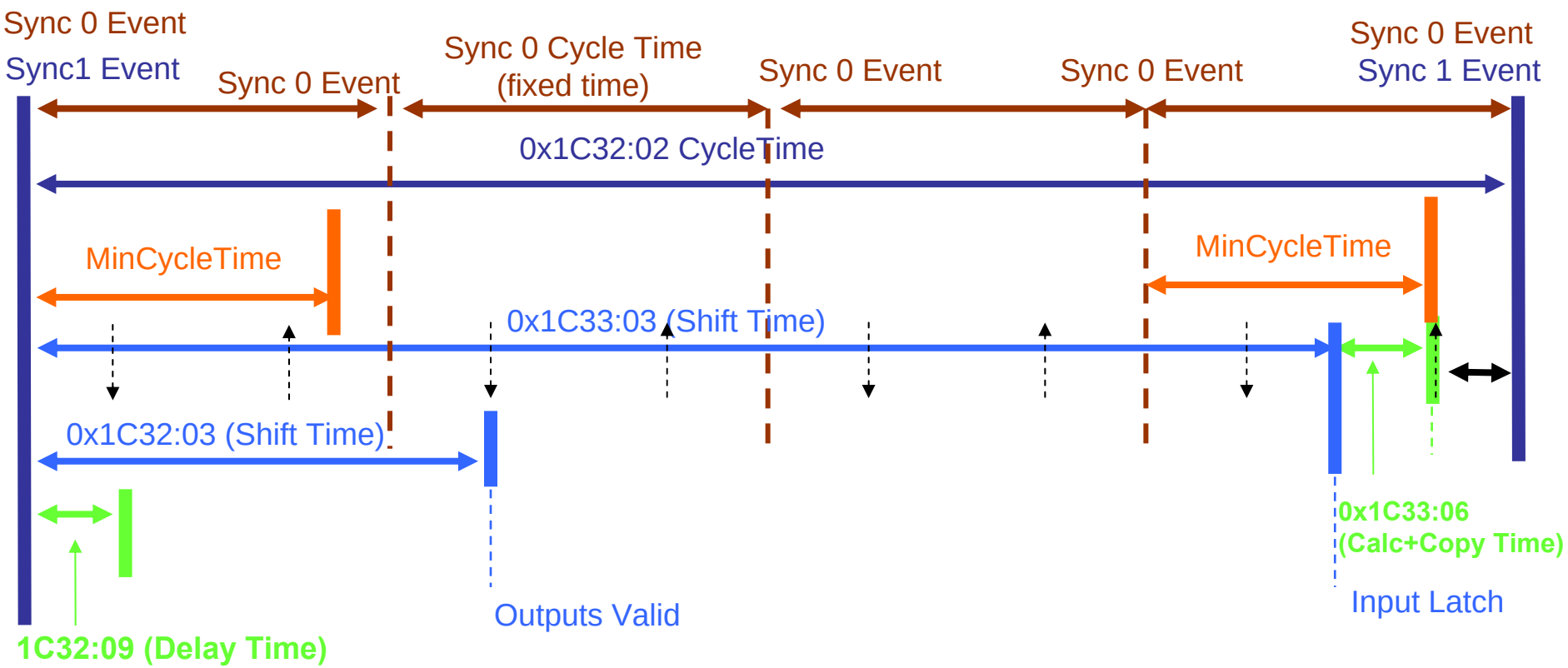

Possible Output Valid /
Input Latch

© EtherCAT Technology Group

Distributed Clocks in TwinCAT

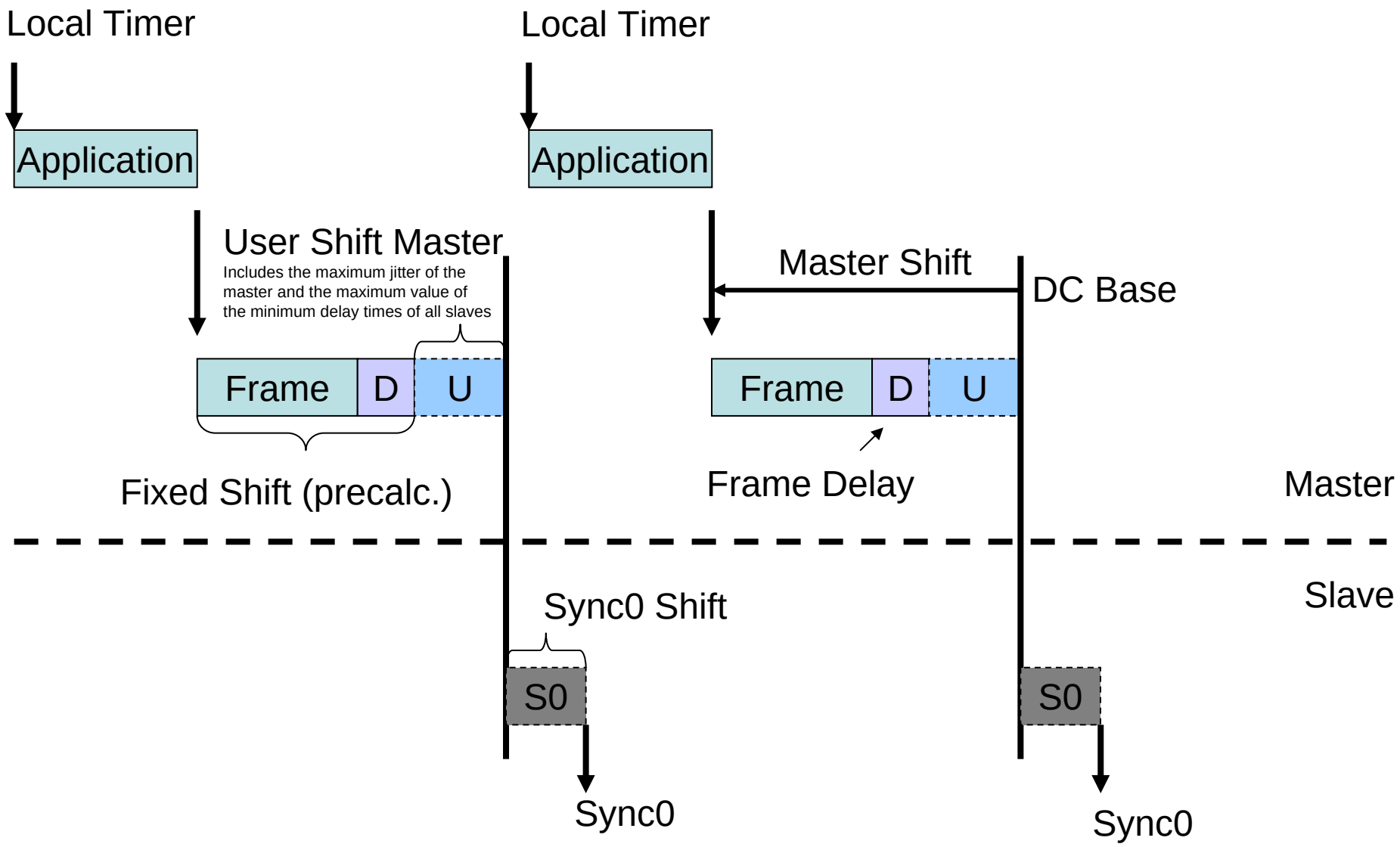

© EtherCAT Technology Group

Master Settings for use of DC

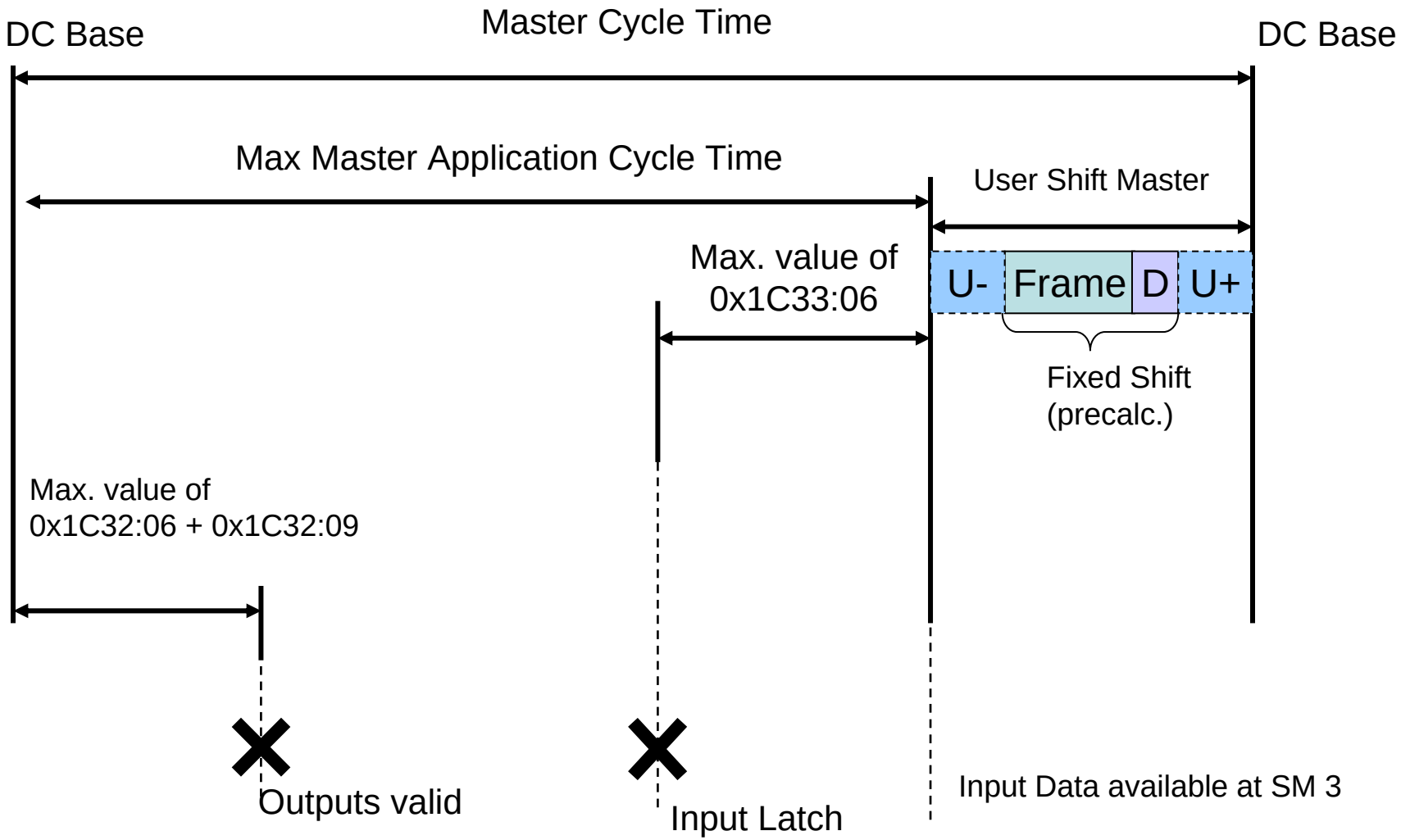

© EtherCAT Technology Group

Master Settings for use of DC – Slave related settings

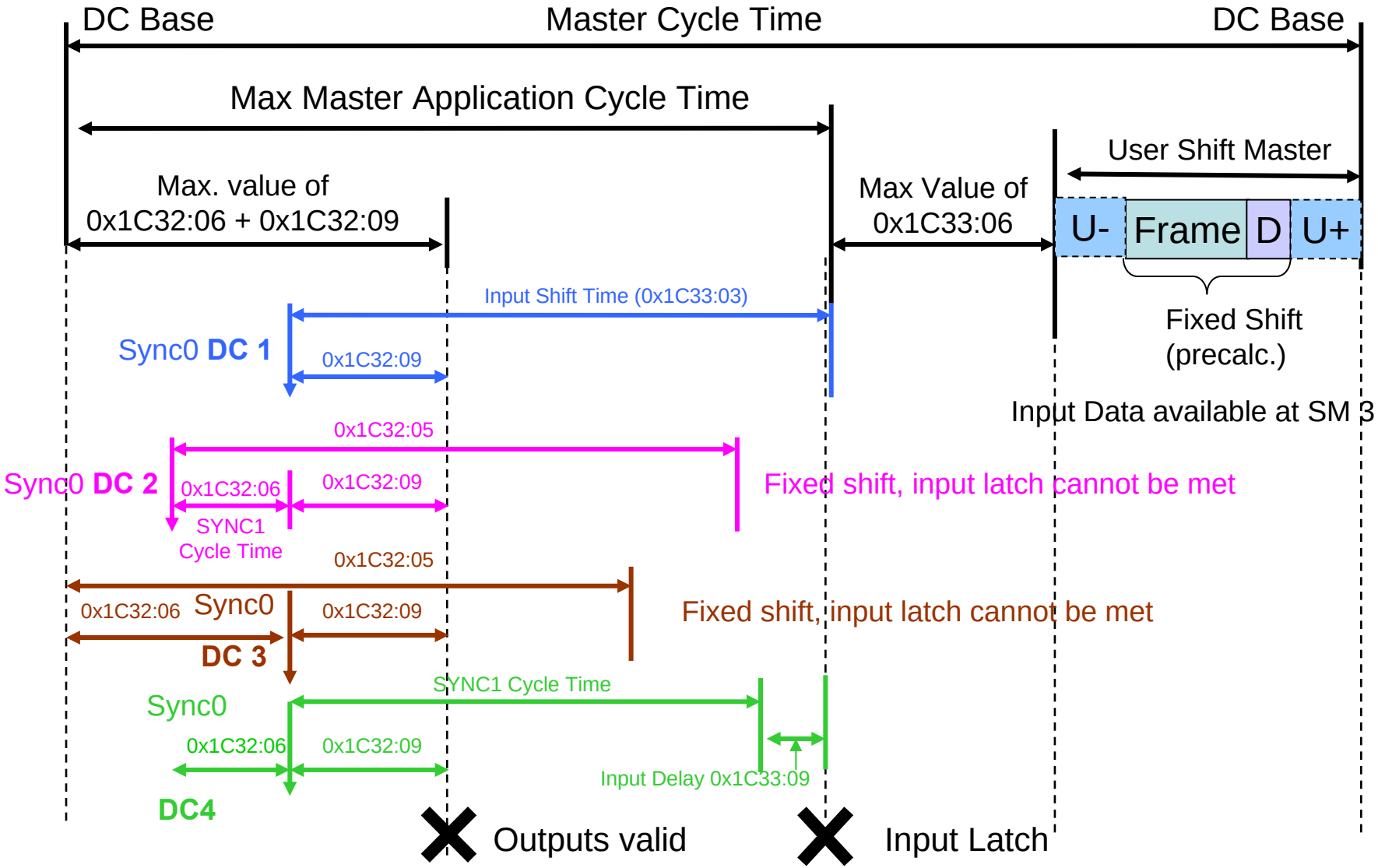

© EtherCAT Technology Group

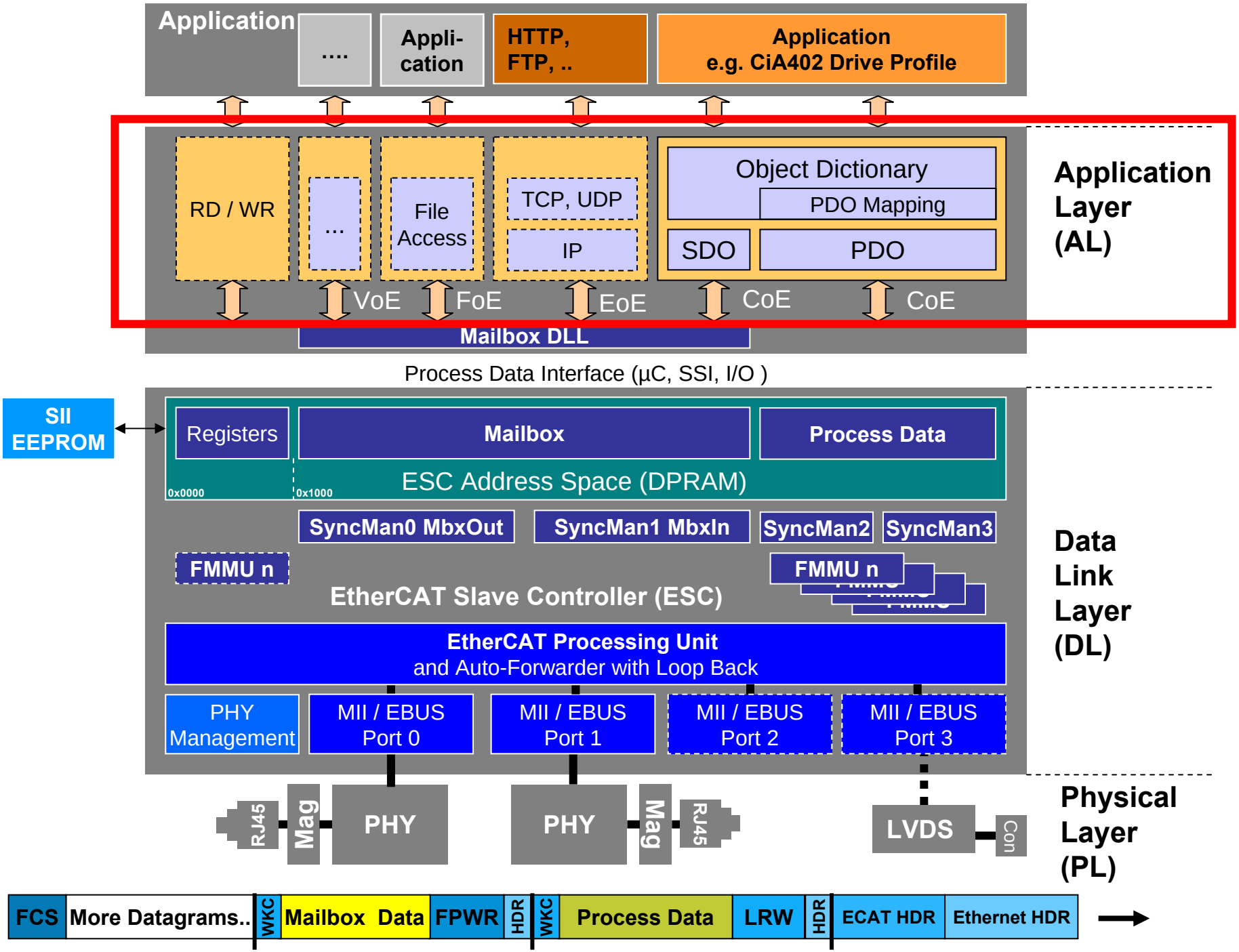
Application
....
Appli-
cation
HTTP,
FTP, ..
Application
e.g. CiA402 Drive Profile
RD / WR
...
File
Access
TCP, UDP
IP
Object Dictionary
PDO Mapping
SDO
PDO
VoE
FoE
EoE
CoE
CoE
Mailbox DLL
Application
Layer
(AL)
Process Data Interface (µC, SSI, I/O)
SII
EEPROM
Registers
Mailbox
Process Data
0x0000
0x1000
ESC Address Space (DPRAM)
SyncMan0 MbxOut
SyncMan1 MbxIn
SyncMan2
SyncMan3
FMMU n
FMMU n
EtherCAT Slave Controller (ESC)
EtherCAT Processing Unit
and Auto-Forwarder with Loop Back
PHY
Management
MII / EBUS
Port 0
MII / EBUS
Port 1
MII / EBUS
Port 2
MII / EBUS
Port 3
Data
Link
Layer
(DL)
RJ45
Mag
PHY
PHY
Mag
RJ45
LVDS
Con
Physical
Layer
(PL)
FCS
More Datagrams..
WKC
Mailbox Data
FPWR
HDR
WKC
Process Data
LRW
HDR
ECAT HDR
Ethernet HDR

Purpose of Application Layer (AL)

EtherCAT Basics
Slave Structure
Device Model (ISO/OSI)
Physical Layer
Data Link Layer
Frame Structure
Addressing
Commands
Memory/Registers
SyncManager
FMMU
Diagnosis
Distributed Clocks
Application Layer
State Machine
Mailbox
Mailbox Interface
EoE Ethernet
CoE CANopen
FoE File Access
SoE Servo Drive
ESI: Device Description
SII: Slave Information /IF
Device Profiles
Modular Devices
Drives
Configuration Tool
EtherCAT Master
Standards&Implementation

- EtherCAT State Machine
  - Boot-up of device and network
- Mailbox Interfaces and Protocols
  - Access Parameter of a device
  - Asynchronous transfer
- Protocols
  - **E**thernet **o**ver **E**therCAT (EoE)
  - **C**AN application protocol **o**ver **E**therCAT (CoE)
  - **F**ile transfer **o**ver **E**therCAT (FoE)
  - **S**ervo Drive **o**ver **E**therCAT (SoE)
- Slave Information Interface (SII)
  - Information about the device's features and configuration

© EtherCAT Technology Group

Purpose of EtherCAT State Machine

EtherCAT Basics
Slave Structure
Device Model (ISO/OSI)
Physical Layer
Data Link Layer
Frame Structure
Addressing
Commands
Memory/Registers
SyncManager
FMMU
Diagnosis
Distributed Clocks
Application Layer
State Machine
Mailbox
Mailbox Interface
EoE Ethernet
CoE CANopen
FoE File Access
SoE Servo Drive
ESI: Device Description
SII: Slave Information /IF
Device Profiles
Modular Devices
Drives
Configuration Tool
EtherCAT Master
Standards&Implementation

- Defines general communication states of EtherCAT slave devices
- Specifies the initialization and error handling of EtherCAT slave devices → Boot-up of the network
- States correspond to the communication relationship between master and slave
- Requested and current state of a slave device are reflected in the AL Control and AL Status registers
- Five states are defined:
  - ‘Init’, ‘Pre-Operational’, ‘Safe-Operational’, ‘Operational’
  - ‘Bootstrap’ optional state for firmware updates

© EtherCAT Technology Group

EtherCAT State Machine

EtherCAT Basics
Slave Structure
Device Model (ISO/OSI)
Physical Layer
Data Link Layer
- Frame Structure
- Addressing
- Commands
- Memory/Registers
- SyncManager
- FMMU
- Diagnosis

Distributed Clocks
Application Layer
- State Machine

Mailbox
- Mailbox Interface
- EoE Ethernet
- CoE CANopen
- FoE File Access
- SoE Servo Drive

ESI: Device Description
SII: Slave Information /IF
Device Profiles
- Modular Devices
- Drives

Configuration Tool
EtherCAT Master
Standards&Implementation

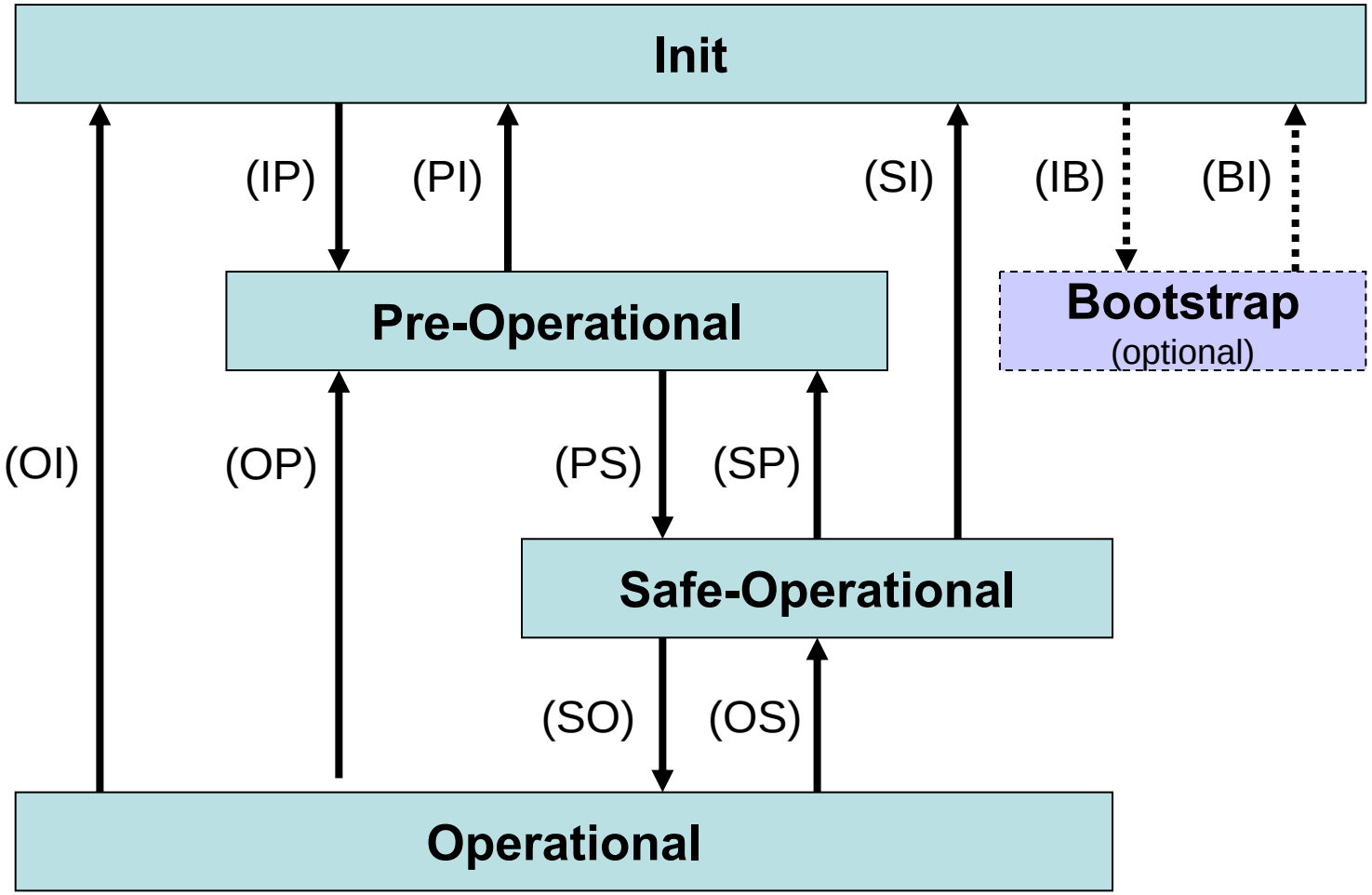

© EtherCAT Technology Group

State: INIT

EtherCAT Basics
Slave Structure
Device Model (ISO/OSI)
Physical Layer
Data Link Layer
Frame Structure
Addressing
Commands
Memory/Registers
SyncManager
FMMU
Diagnosis
Distributed Clocks
Application Layer
State Machine
Mailbox
Mailbox Interface
EoE Ethernet
CoE CANopen
FoE File Access
SoE Servo Drive
ESI: Device Description
SII: Slave Information /IF
Device Profiles
Modular Devices
Drives
Configuration Tool
EtherCAT Master
Standards&Implementation

- **'Init' State**
  - No communication on the Application Layer
  - Master has access to the DL-Information registers

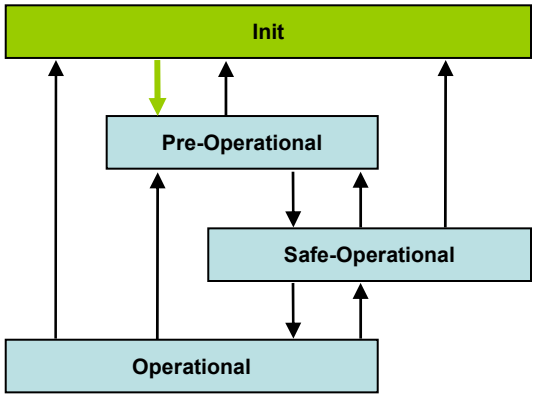

- **Transition to 'Pre-Operational'**
  - Master configures register, at least:
    - DL Address register
    - Sync Manager channels for Mailbox communication
  - Master requested 'Pre-Operational' state
    - sets AL Control register
    - wait for AL Status register confirmation

© EtherCAT Technology Group

State: PRE-OP

EtherCAT Basics
Slave Structure
Device Model (ISO/OSI)
Physical Layer
Data Link Layer
Frame Structure
Addressing
Commands
Memory/Registers
SyncManager
FMMU
Diagnosis
Distributed Clocks
Application Layer
State Machine
Mailbox
Mailbox Interface
EoE Ethernet
CoE CANopen
FoE File Access
SoE Servo Drive
ESI: Device Description
SII: Slave Information /IF
Device Profiles
Modular Devices
Drives
Configuration Tool
EtherCAT Master
Standards&Implementation

- **'Pre-Operational' State**
  - Mailbox communication on the Application Layer
  - No Process Data communication

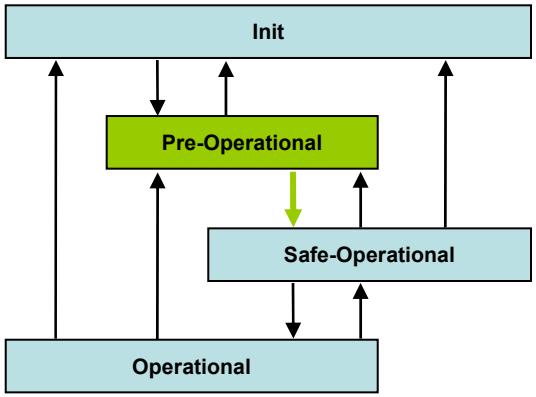

- **Transition to 'Safe-Operational'**
  - Master configures parameter using the Mailbox
    - e.g.: Process Data Mapping
  - Master configures DL Register
    - SyncManager channels for Process Data communication
    - FMMU channels
  - Master requested 'Safe-Operational' state

© EtherCAT Technology Group

State: SAFE-OP

EtherCAT Basics
Slave Structure
Device Model (ISO/OSI)
Physical Layer
Data Link Layer
Frame Structure
Addressing
Commands
Memory/Registers
SyncManager
FMMU
Diagnosis
Distributed Clocks
Application Layer
State Machine
Mailbox
Mailbox Interface
EoE Ethernet
CoE CANopen
FoE File Access
SoE Servo Drive
ESI: Device Description
SII: Slave Information /IF
Device Profiles
Modular Devices
Drives
Configuration Tool
EtherCAT Master
Standards&Implementation

- **'Safe-Operational' State**
  - Mailbox communication on the Application Layer
  - Process Data communication, but only Inputs are evaluated – Outputs in 'Safe' state

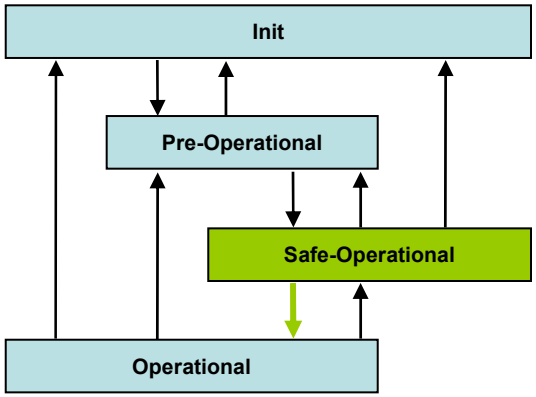

- **Transition to 'Operational'**
  - Master sends valid Outputs
  - Master requested 'Operational' state (AL Control/Status)

© EtherCAT Technology Group

State: OP

EtherCAT Basics
Slave Structure
Device Model (ISO/OSI)
Physical Layer
Data Link Layer
Frame Structure
Addressing
Commands
Memory/Registers
SyncManager
FMMU
Diagnosis
Distributed Clocks
Application Layer
State Machine
Mailbox
Mailbox Interface
EoE Ethernet
CoE CANopen
FoE File Access
SoE Servo Drive
ESI: Device Description
SII: Slave Information /IF
Device Profiles
Modular Devices
Drives
Configuration Tool
EtherCAT Master
Standards&Implementation

- **'Operational' State**
  - Inputs and Outputs are valid

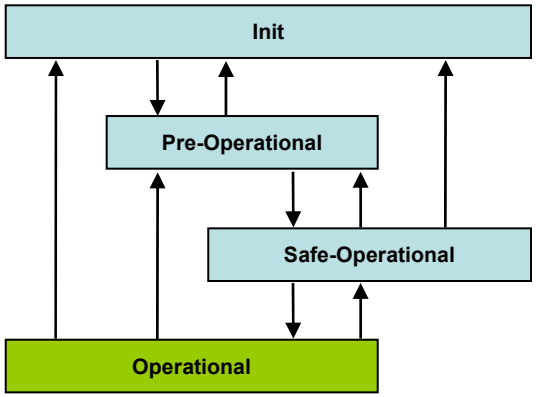

© EtherCAT Technology Group

State: BOOT

EtherCAT Basics
Slave Structure
Device Model (ISO/OSI)
Physical Layer
Data Link Layer
Frame Structure
Addressing
Commands
Memory/Registers
SyncManager
FMMU
Diagnosis
Distributed Clocks
Application Layer
State Machine
Mailbox
Mailbox Interface
EoE Ethernet
CoE CANopen
FoE File Access
SoE Servo Drive
ESI: Device Description
SII: Slave Information /IF
Device Profiles
Modular Devices
Drives
Configuration Tool
EtherCAT Master
Standards&Implementation

- **'Bootstrap' State**
  - 'Bootstrap' State is optional – but recommended if firmware updates necessary
  - State changes only from and to 'Init'
  - No Process Data communication
  - Communication via Mailbox on Application Layer
  - Special mailbox configuration possible, e.g. larger mailbox size
  - Only FoE protocol available (possibly limited "file" range)

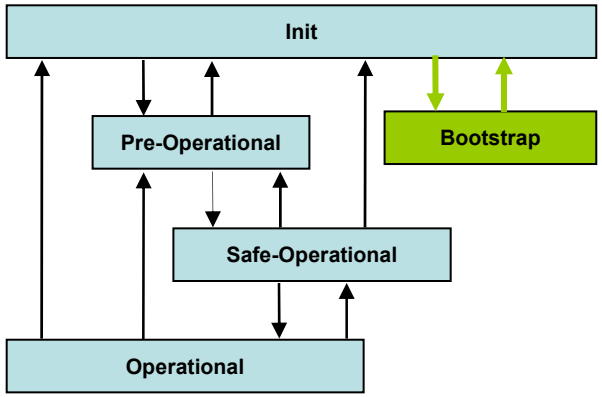

© EtherCAT Technology Group

EtherCAT State Machine: Control and Status

EtherCAT Basics
Slave Structure
Device Model (ISO/OSI)
Physical Layer
Data Link Layer
Frame Structure
Addressing
Commands
Memory/Registers
SyncManager
FMMU
Diagnosis
Distributed Clocks
Application Layer
State Machine
Mailbox
Mailbox Interface
EoE Ethernet
CoE CANopen
FoE File Access
SoE Servo Drive
ESI: Device Description
SII: Slave Information /IF
Device Profiles
Modular Devices
Drives
Configuration Tool
EtherCAT Master
Standards&Implementation

- Requested and current state of a slave device are reflected in the AL Control and AL Status registers
  - AL Control (0x0120)
    Initiate State Transition of Device State Machine
  - AL Status (0x0130)
    Actual State of Device State Machine
  - AL Status Code (0x0134)
    Reason of error or other status code

© EtherCAT Technology Group

Diagnosis at Application Layer

EtherCAT Basics
Slave Structure
Device Model (ISO/OSI)
Physical Layer
Data Link Layer
Frame Structure
Addressing
Commands
Memory/Registers
SyncManager
FMMU
Diagnosis
Distributed Clocks
Application Layer
State Machine
Mailbox
Mailbox Interface
EoE Ethernet
CoE CANopen
FoE File Access
SoE Servo Drive
ESI: Device Description
SII: Slave Information /IF
Device Profiles
Modular Devices
Drives
Configuration Tool
EtherCAT Master
Standards&Implementation

- AL Status Code (0x0134)
  - Error Codes (extract)

Code	Description
0x0000	No Error
0x0011	Invalid requested state change
0x0015	Invalid mailbox configuration
0x0018	No valid inputs available
0x0019	No valid outputs
0x001A	Synchronization error
0x001B	Sync manager watchdog

  - Further Status Codes (extract)

Code	Description
0x0021	Slave needs INIT
0x0022	Slave need PREOP
0x0030	Invalid DC Sync Configuration
0x0031	Invalid DC Latch Configuration

© EtherCAT Technology Group

Mailbox Transfer

EtherCAT Basics
Slave Structure
Device Model (ISO/OSI)
Physical Layer
Data Link Layer
- Frame Structure
- Addressing
- Commands
- Memory/Registers
- SyncManager
- FMMU
- Diagnosis

Distributed Clocks
Application Layer
- State Machine

Mailbox
- Mailbox Interface
- EoE Ethernet
- CoE CANopen
- FoE File Access
- SoE Servo Drive

ESI: Device Description
SII: Slave Information /IF
Device Profiles
- Modular Devices
- Drives

Configuration Tool
EtherCAT Master
Standards&Implementation

Mailbox Transfer for Parameter Data
Full duplex capable

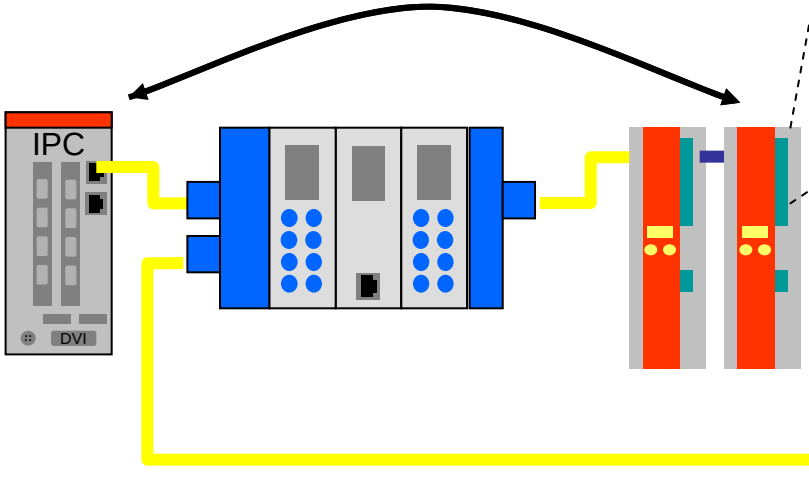

Device Parameter (example)

Index	Value
0x1600	RxPDO Mapping
0x1A00	TxPDO Mapping
0x2000	Current control
0x2010	Velocity control
0x2040	Motor parameter
0x2070	Actual values
0x6040	Controlword
0x6041	Statusword

State "PreOperational"

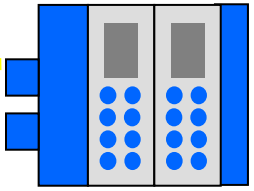

Simple IO-Device
No Parameter
→ No Mailbox necessary

© EtherCAT Technology Group

Purpose of Mailbox Transfer

EtherCAT Basics
Slave Structure
Device Model (ISO/OSI)
Physical Layer
Data Link Layer
Frame Structure
Addressing
Commands
Memory/Registers
SyncManager
FMMU
Diagnosis
Distributed Clocks
Application Layer
State Machine
Mailbox
Mailbox Interface
EoE Ethernet
CoE CANopen
FoE File Access
SoE Servo Drive
ESI: Device Description
SII: Slave Information /IF
Device Profiles
Modular Devices
Drives
Configuration Tool
EtherCAT Master
Standards&Implementation

- Standard way to exchange Parameter Data
- The Mailbox Interface is optional – but recommended
- Needed if Process Data configurable or any other non cyclic services
- Full duplex capable
  (Slave can initiate a communication)
- 2 Sync Manager channels reserved
  - Sync Manager 0 : Master to Slave
  - Sync Manager 1 : Slave to Master
- Available at early stage of communication
  (State Pre-Operational)
- Multi protocol capable

© EtherCAT Technology Group

Mailbox Protocol Types

EtherCAT Basics
Slave Structure
Device Model (ISO/OSI)
Physical Layer
Data Link Layer
Frame Structure
Addressing
Commands
Memory/Registers
SyncManager
FMMU
Diagnosis
Distributed Clocks
Application Layer
State Machine
Mailbox
Mailbox Interface
EoE Ethernet
CoE CANopen
FoE File Access
SoE Servo Drive
ESI: Device Description
SII: Slave Information /IF
Device Profiles
Modular Devices
Drives
Configuration Tool
EtherCAT Master
Standards&Implementation

- Ethernet over EtherCAT (EoE)
  - Tunnels standard Ethernet Frames over EtherCAT
- CAN application protocol over EtherCAT (CoE)
  - Access of a CANopen* object dictionary and its objects
  - CANopen* Emergency and optional event driven PDO messages
- File Access over EtherCAT (FoE)
  - Download and upload firmware and other ‘files’
- Servo Drive over EtherCAT (SoE)
  - Access the Servo Profile Identifier (IDN)
- Vendor specific Profile over EtherCAT (VoE)
  - First DWORD contains the Vendor ID, the next WORD contains a Vendor Type, the rest is vendor specific

© EtherCAT Technology Group
* CANopen is a trademark of the CAN in Automation e.V.

Mailbox Interface

EtherCAT Basics
Slave Structure
Device Model (ISO/OSI)
Physical Layer
Data Link Layer
- Frame Structure
- Addressing
- Commands
- Memory/Registers
- SyncManager
- FMMU
- Diagnosis

Distributed Clocks
Application Layer
- State Machine

Mailbox
- Mailbox Interface
- EoE Ethernet
- CoE CANopen
- FoE File Access
- SoE Servo Drive

ESI: Device Description
SII: Slave Information /IF
Device Profiles
- Modular Devices
- Drives

Configuration Tool
EtherCAT Master
Standards&Implementation

- Datagram within an EtherCAT Frame

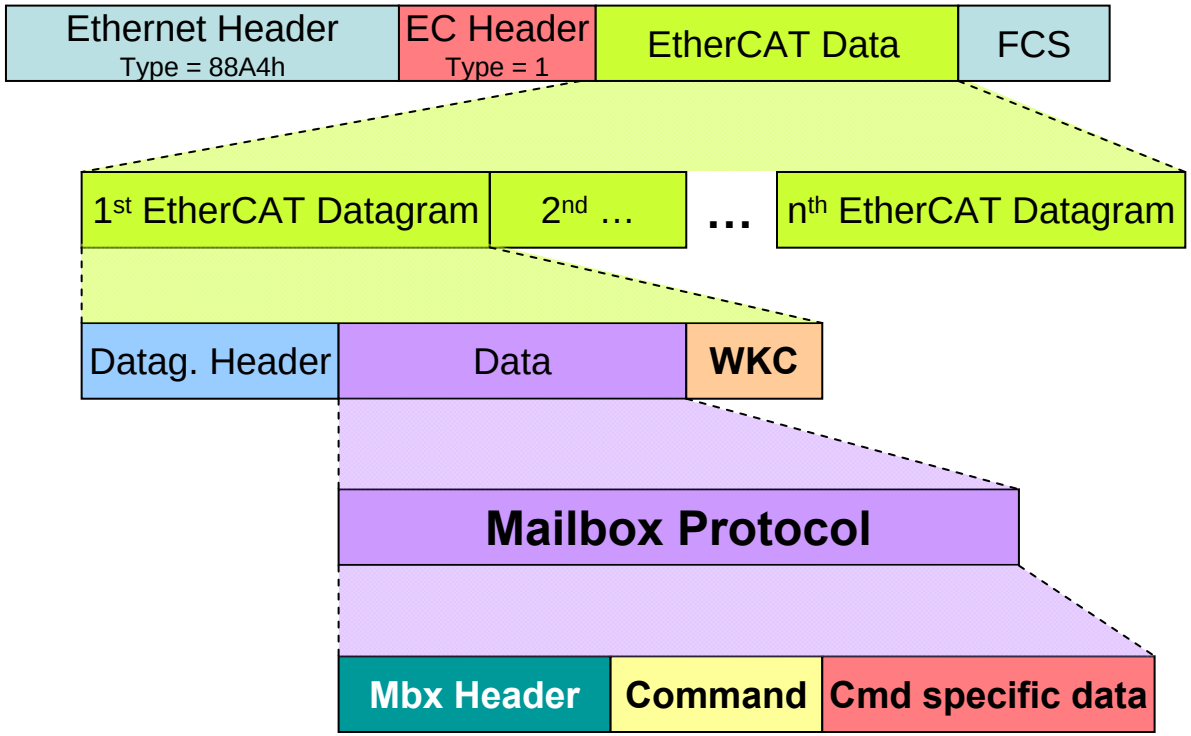

© EtherCAT Technology Group

Mailbox Header

EtherCAT Basics
Slave Structure
Device Model (ISO/OSI)
Physical Layer
Data Link Layer
- Frame Structure
- Addressing
- Commands
- Memory/Registers
- SyncManager
- FMMU
- Diagnosis

Distributed Clocks
Application Layer
- State Machine

Mailbox
- Mailbox Interface
- EoE Ethernet
- CoE CANopen
- FoE File Access
- SoE Servo Drive

ESI: Device Description
SII: Slave Information /IF
Device Profiles
- Modular Devices
- Drives

Configuration Tool
EtherCAT Master
Standards&Implementation

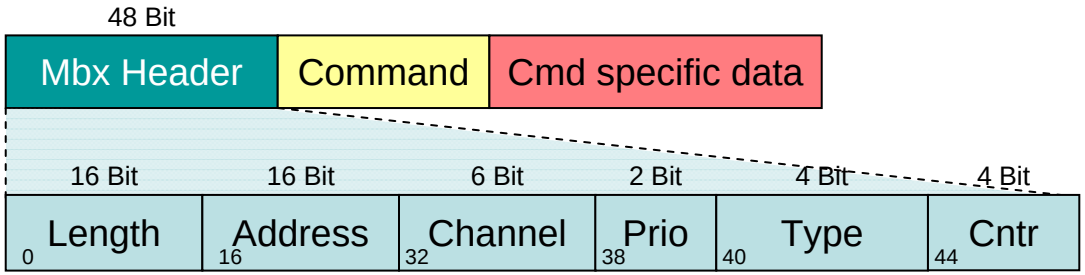

Length	Length of following data
Address	Station Address of originator
Channel	reserved for future use
Priority	reserved for future use
Type	Mailbox Type, Protocol identifier for following data 0 Mailbox Error 2 EoE (Ethernet over EtherCAT) 3 CoE (CAN application protocol over EtherCAT) 4 FoE (File Access over EtherCAT) 5 SoE (Servo Drive over EtherCAT) 15 VoE (Vendor specific profile over EtherCAT)
Counter	Sequence number for duplicate detection Increments with every new mailbox service (only the values 1-7 will be used to be compatible with older versions).

© EtherCAT Technology Group

Mailbox Error Handling Procedure

EtherCAT Basics
Slave Structure
Device Model (ISO/OSI)
Physical Layer
Data Link Layer
Frame Structure
Addressing
Commands
Memory/Registers
SyncManager
FMMU
Diagnosis
Distributed Clocks
Application Layer
State Machine
Mailbox
Mailbox Interface
EoE Ethernet
CoE CANopen
FoE File Access
SoE Servo Drive
ESI: Device Description
SII: Slave Information /IF
Device Profiles
Modular Devices
Drives
Configuration Tool
EtherCAT Master
Standards&Implementation

- Reliable way of mailbox data exchange
- Mailbox control procedure
- Recover from lost frames
- No additional frames if no error
- Additional receive buffer required
- Extra counter in mailbox header needed
- HW/SW solution
  - SyncManager configuration register with toggle flags
  - SW-Mailbox-DL Layer for checking toggle bits

© EtherCAT Technology Group

Mailbox Error Handling – Sync Manager

EtherCAT Basics
Slave Structure
Device Model (ISO/OSI)
Physical Layer
Data Link Layer
- Frame Structure
- Addressing
- Commands
- Memory/Registers
- SyncManager
- FMMU
- Diagnosis

Distributed Clocks
Application Layer
- State Machine

Mailbox
- Mailbox Interface
- EoE Ethernet
- CoE CANopen
- FoE File Access
- SoE Servo Drive

ESI: Device Description
SII: Slave Information /IF
Device Profiles
- Modular Devices
- Drives

Configuration Tool
EtherCAT Master
Standards&Implementation

- Sync Manager channel configuration registers

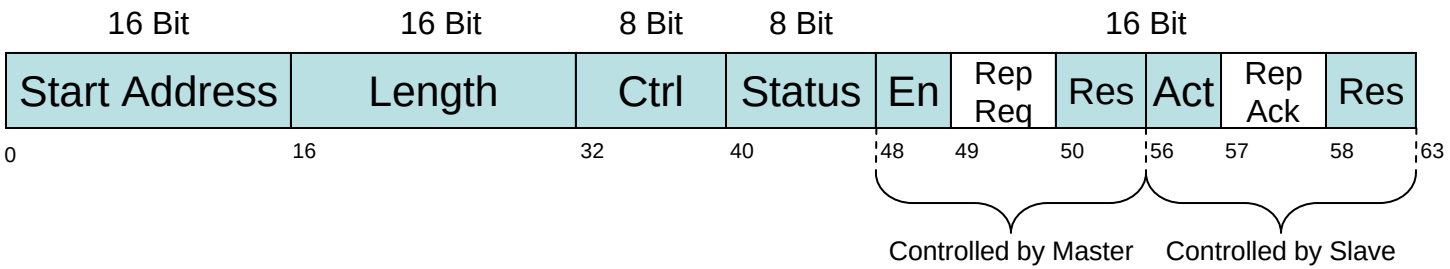

Rep Req……Repeat Request
Rep Ack ……Repeat Acknowledge

- Following:
  - Mailbox Error Handling - Write Example
  - Mailbox Error Handling - Read Example

© EtherCAT Technology Group

Mailbox Error Handling – Mailbox Write

EtherCAT Basics
Slave Structure
Device Model (ISO/OSI)
Physical Layer
Data Link Layer
- Frame Structure
- Addressing
- Commands
- Memory/Registers
- SyncManager
- FMMU
- Diagnosis

Distributed Clocks
Application Layer
- State Machine

Mailbox
- Mailbox Interface
- EoE Ethernet
- CoE CANopen
- FoE File Access
- SoE Servo Drive

ESI: Device Description
SII: Slave Information /IF
Device Profiles
- Modular Devices
- Drives

Configuration Tool
EtherCAT Master
Standards&Implementation

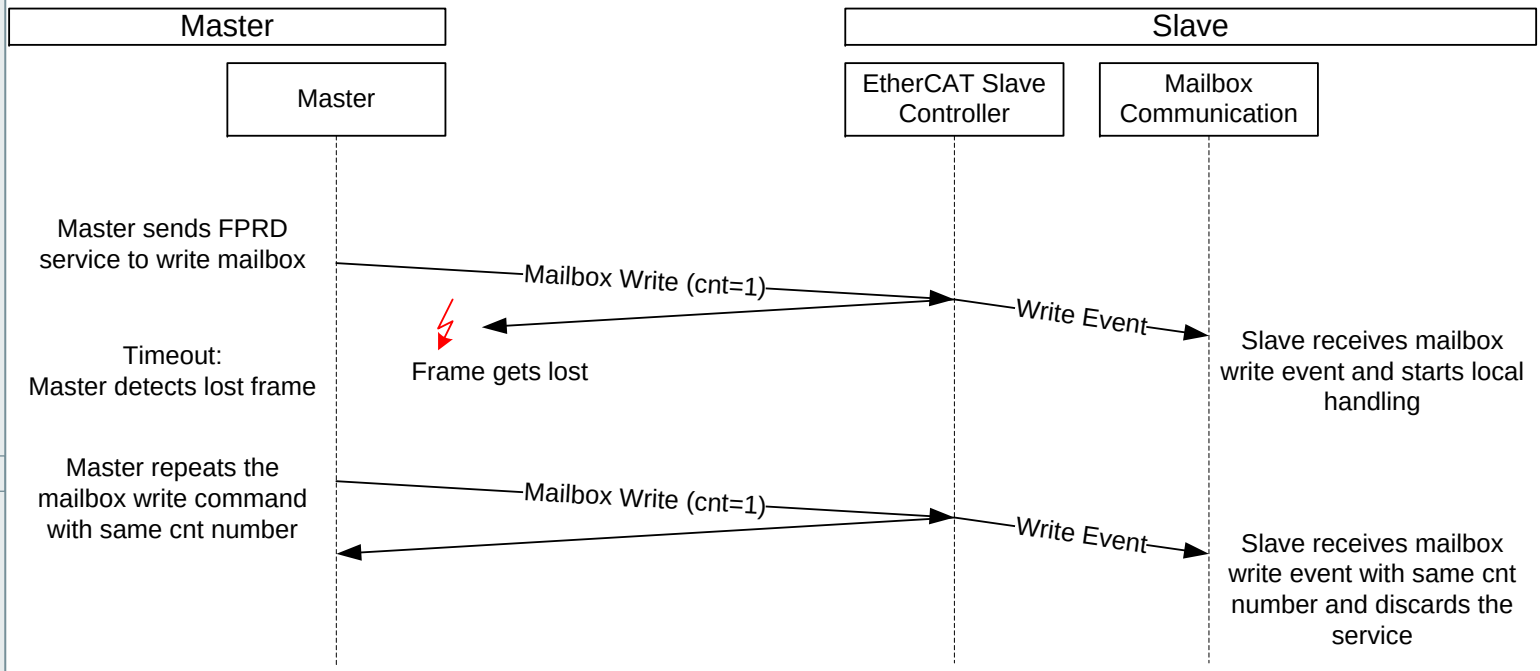

© EtherCAT Technology Group

Mailbox Error Handling – Mailbox Read

EtherCAT Basics
Slave Structure
Device Model (ISO/OSI)
Physical Layer
Data Link Layer
- Frame Structure
- Addressing
- Commands
- Memory/Registers
- SyncManager
- FMMU
- Diagnosis

Distributed Clocks
Application Layer
- State Machine

Mailbox
- Mailbox Interface
- EoE Ethernet
- CoE CANopen
- FoE File Access
- SoE Servo Drive

ESI: Device Description
SII: Slave Information /IF
Device Profiles
- Modular Devices
- Drives

Configuration Tool
EtherCAT Master
Standards&Implementation

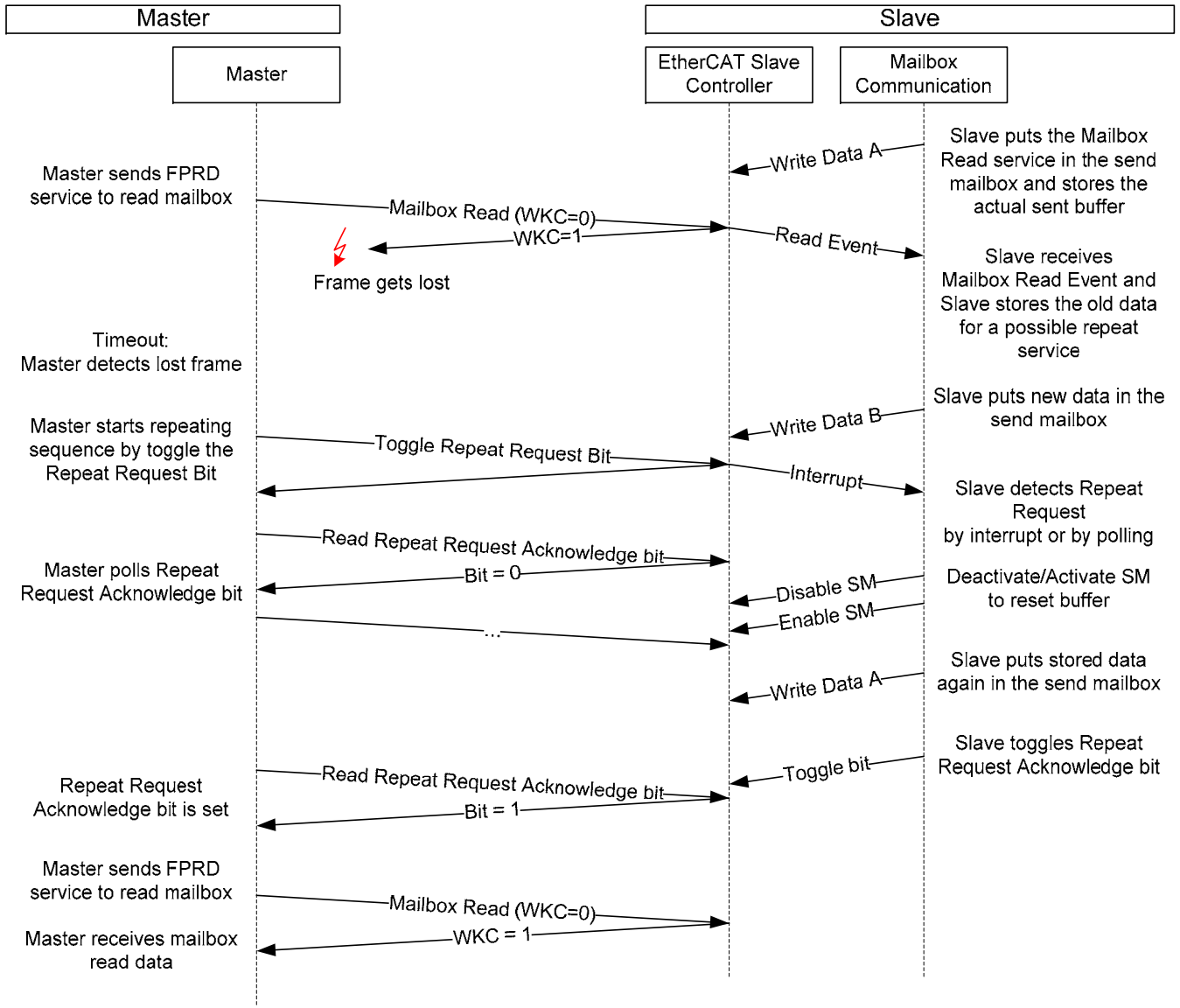

© EtherCAT Technology Group

Ethernet over EtherCAT (EoE)

EtherCAT Basics
Slave Structure
Device Model (ISO/OSI)
Physical Layer
Data Link Layer
- Frame Structure
- Addressing
- Commands
- Memory/Registers
- SyncManager
- FMMU
- Diagnosis

Distributed Clocks
Application Layer
- State Machine

Mailbox
- Mailbox Interface
- EoE Ethernet
- CoE CANopen
- FoE File Access
- SoE Servo Drive

ESI: Device Description
SII: Slave Information /IF
Device Profiles
- Modular Devices
- Drives

Configuration Tool
EtherCAT Master
Standards&Implementation

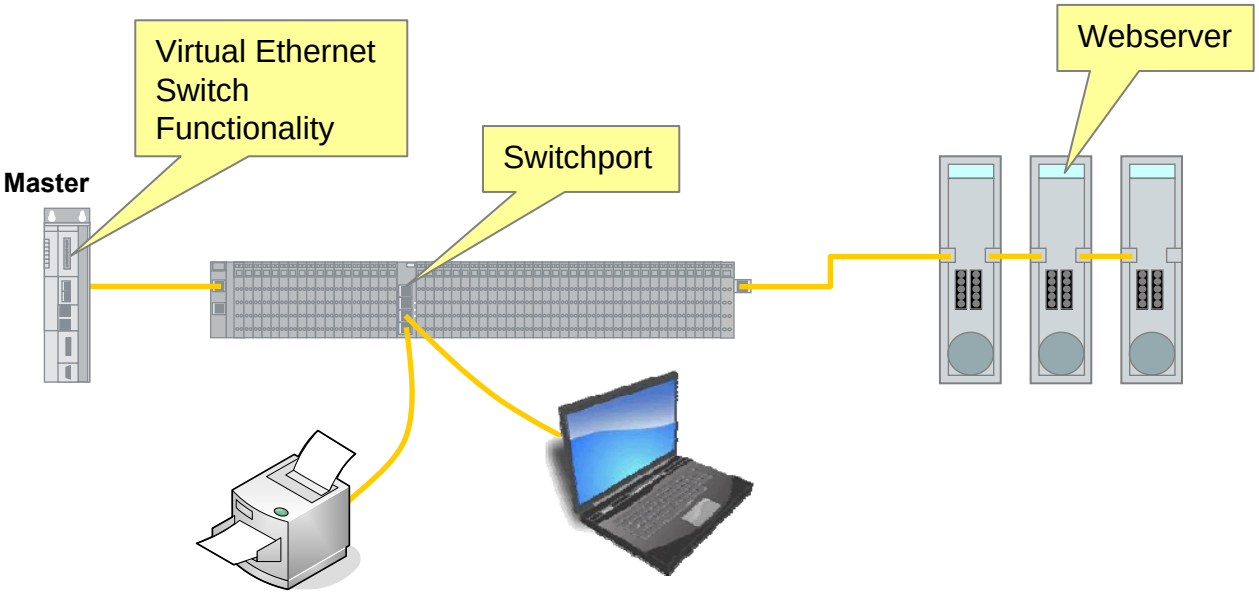

© EtherCAT Technology Group

Ethernet over EtherCAT (EoE)

Virtual Switch	
MAC	**Slave-Address**
02-01-05-10-03-f4	0x1009
02-01-05-10-03-B3	0x100A
57-43-17-91-55-77	0x1007
07-03-15-11-43-d7	0x1003

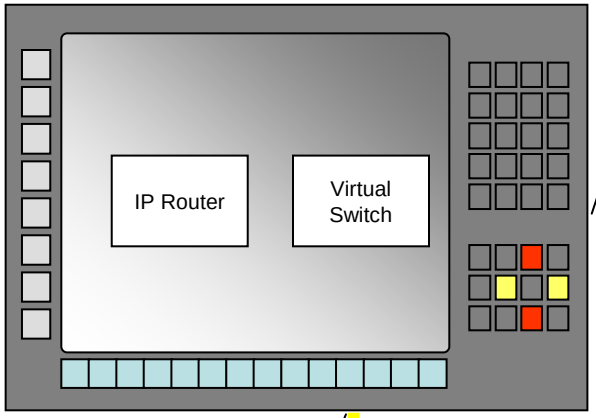

Master-Interface
MAC: 00-03-47-4A-19-D2
IP: 192.168.1.100
Subnet: 255.255.255.0

Slave-Address: 0x1009
v. MAC: 02-01-05-10-03-f4
IP: 192.168.1.1
Subnet: 255.255.255.0
Gateway: 192.168.1.5
Name: Axis_2

Slave-Address: 0x100A
v. MAC: 02-01-05-10-03-B3
IP: 192.168.1.2
Subnet: 255.255.255.0
Gateway: 192.168.1.5
Name: Axis_2

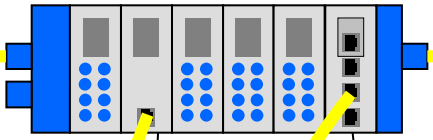

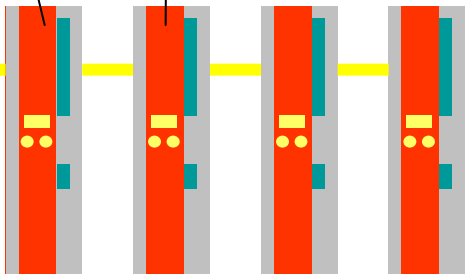

Standard-Ethernet
MAC: 00-15-C5-3B-2F-00
IP: 176.16.6.60
Subnet: 255.255.0.0
Gateway: 172.16.102.1
DNS Ser: 127.16.1.19

User-Laptop
MAC: 57-43-17-91-55-77
IP: 192.168.1.3
Name: User_Laptop

Label printer
MAC: 07-03-15-11-43-d7
IP: 192.168.1.4
Name: Label_printer

Switchport
Slave-Address: 0x1003
MAC: -
IP: -
Name: -

Switchport
Slave-Address: 0x1007
MAC: -
IP: -
Name: -

© EtherCAT Technology Group

Ethernet over EtherCAT (EoE)

Virtual Switch	
MAC	**Slave-Address**
02-01-05-10-03-f4	0x1009
02-01-05-10-03-B3	0x100A
57-43-17-91-55-77	0x1007
07-03-15-11-43-d7	0x1003

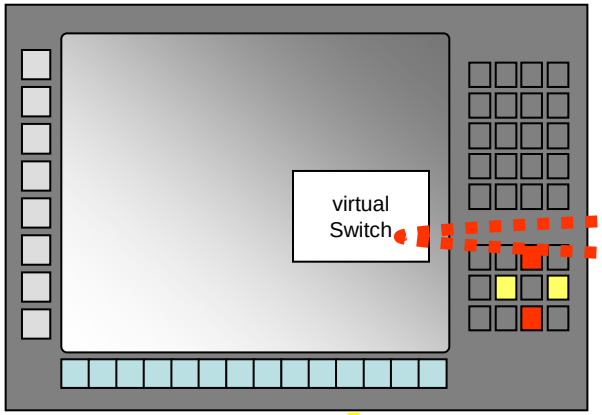

Master-Interface
MAC: 00-03-47-4A-19-D2
IP: 192.168.1.100
Subnet: 255.255.0.0

Slave-Address: 0x1009
v. MAC: 02-01-05-10-03-f4
IP: 192.168.1.1
Subnet: 255.255.255.0
Gateway: 192.168.1.5
Name: Axis_2

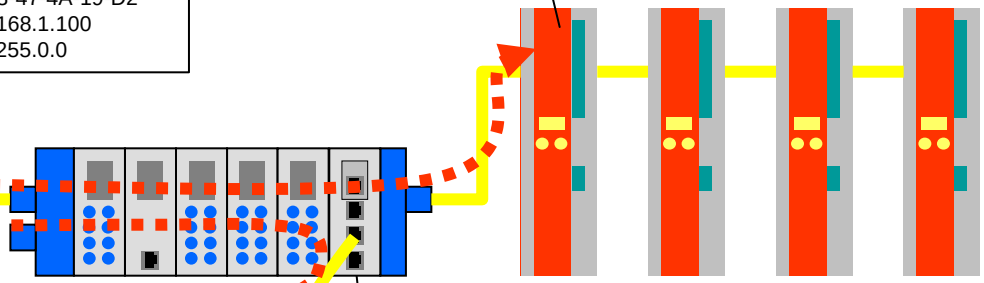

User-Laptop
MAC: 57-43-17-91-55-77
IP: 192.168.1.3
Name: User_Laptop

Handling:
1. ARP Req from User-Laptop
(MAC: Broadcast, IP: 192.168.1.1)
2. via Mailbox from Switchport to virtual Switch
3. Mailbox-Telegram from virtual Switch to all devices with EoE
4. ARP-Resp. from device with 192.168.1.1 with assigned MAC-Address
5. Standard IP-Transfer via virtual Switch

Switchport
Slave-Address: 0x1007
MAC: -
IP: -
Name: -

© EtherCAT Technology Group

Ethernet over EtherCAT (EoE)

Virtual Switch	
MAC	**Slave-Address**
02-01-05-10-03-f4	0x1009
02-01-05-10-03-B3	0x100A
57-43-17-91-55-77	0x1007
07-03-15-11-43-d7	0x1003

Handling:
1. User-Laptop gets MAC-ID of printer via ARP
2. IP-Telegram from User-Laptop to printer
Dest-MAC: 07-03-15-11-43-d7,
→ virtual Switch forwards to EtherCAT Slave 0x1003

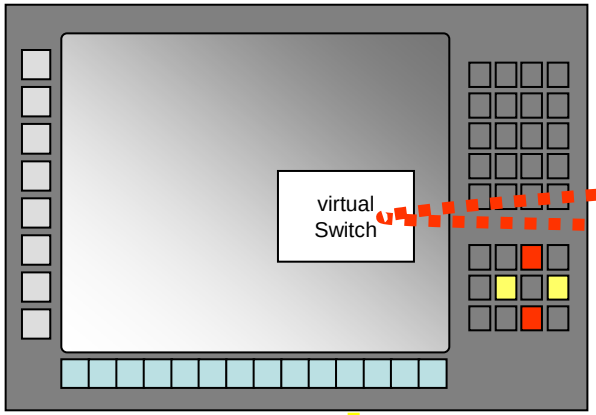

Master-Interface
MAC: 00-03-47-4A-19-D2
IP: 192.168.1.100
Subnet: 255.255.0.0

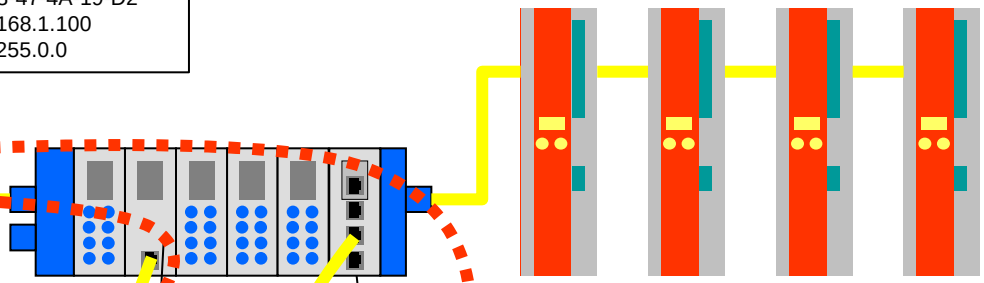

User-Laptop
MAC: 57-43-17-91-55-77
IP: 192.168.1.3
Name: User_Laptop

Label printer
MAC: 07-03-15-11-43-d7
IP: 192.168.1.4
Name: Label_printer

Switchport
Slave-Address: 0x1003
MAC: -
IP: -
Name: -

Switchport
Slave-Address: 0x1007
MAC: -
IP: -
Name: -

© EtherCAT Technology Group

Ethernet over EtherCAT (EoE)

Virtual Switch	
MAC	**Slave-Address**
02-01-05-10-03-f4	0x1009
02-01-05-10-03-B3	0x100A
57-43-17-91-55-77	0x1007
07-03-15-11-43-d7	0x1003

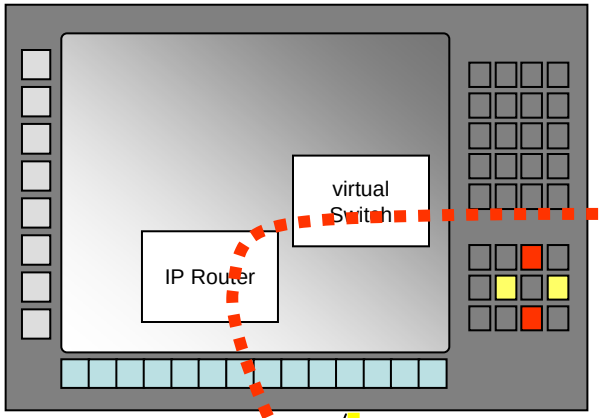

Master-Interface
MAC: 00-03-47-4A-19-D2
IP: 192.168.1.100
Subnet: 255.255.0.0

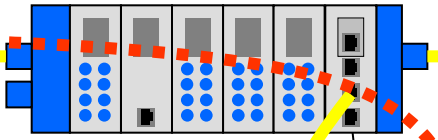

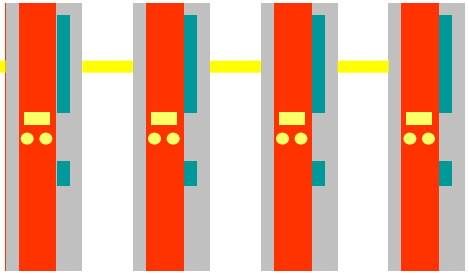

User-Laptop
MAC: 57-43-17-91-55-77
IP: 192.168.1.3
Name: User_Laptop

Standard-Ethernet
MAC: 00-15-C5-3B-2F-00
IP: 176.16.6.60
Subnet: 255.255.0.0
Gateway: 172.16.102.1
DNS Ser: 127.16.1.19

Handling:
1. Enable IP-Router
2. Set Route in external PC
192.168.1.3 ←→ 176.16.6.60

Switchport
Slave-Address: 0x1007
v. MAC: -
IP: -
Name: -

© EtherCAT Technology Group

EoE Route Configuration

Diagnosis / Configuration

EtherCAT Master

EtherCAT Slave
with WebServer

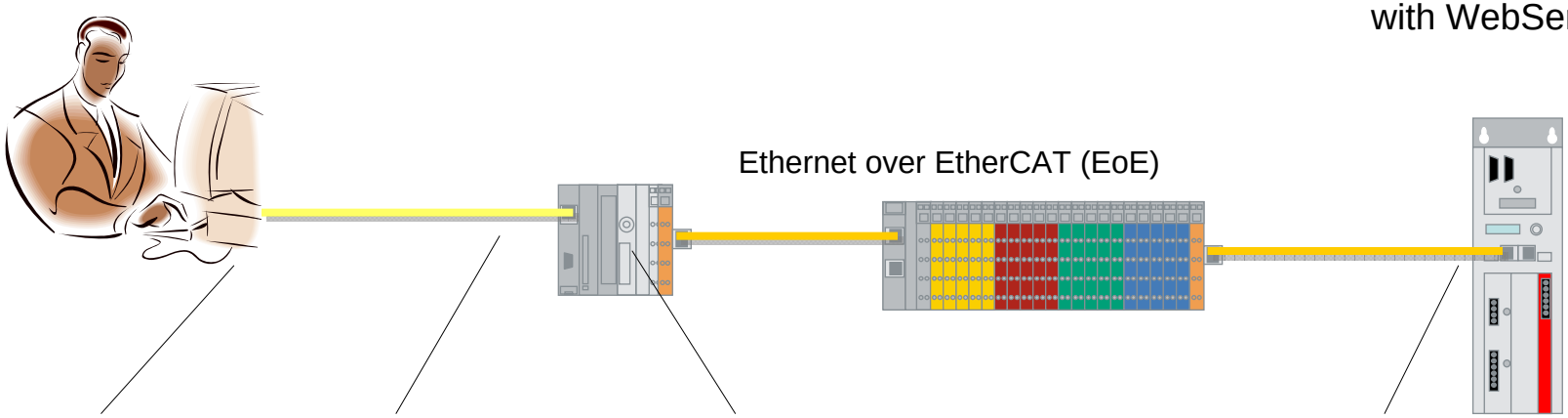

IP: 172.16.8.31
Mask: 255.255.0.0

IP: 172.16.4.205
Mask: 255.255.0.0

IP: 192.168.1.100
Mask: 255.255.255.0

IP: 192.168.1.11
Mask: 255.255.255.0

route
ADD 192.168.1.0
MASK 255.255.255.0
172.16.4.205

IP Routing must be
enabled

route
ADD 172.16.0.0
MASK 255.255.0.0
192.168.1.100

Or

Default Gateway:
192.168.1.100

© EtherCAT Technology Group

EoE – Support of DHCP, BOOTP

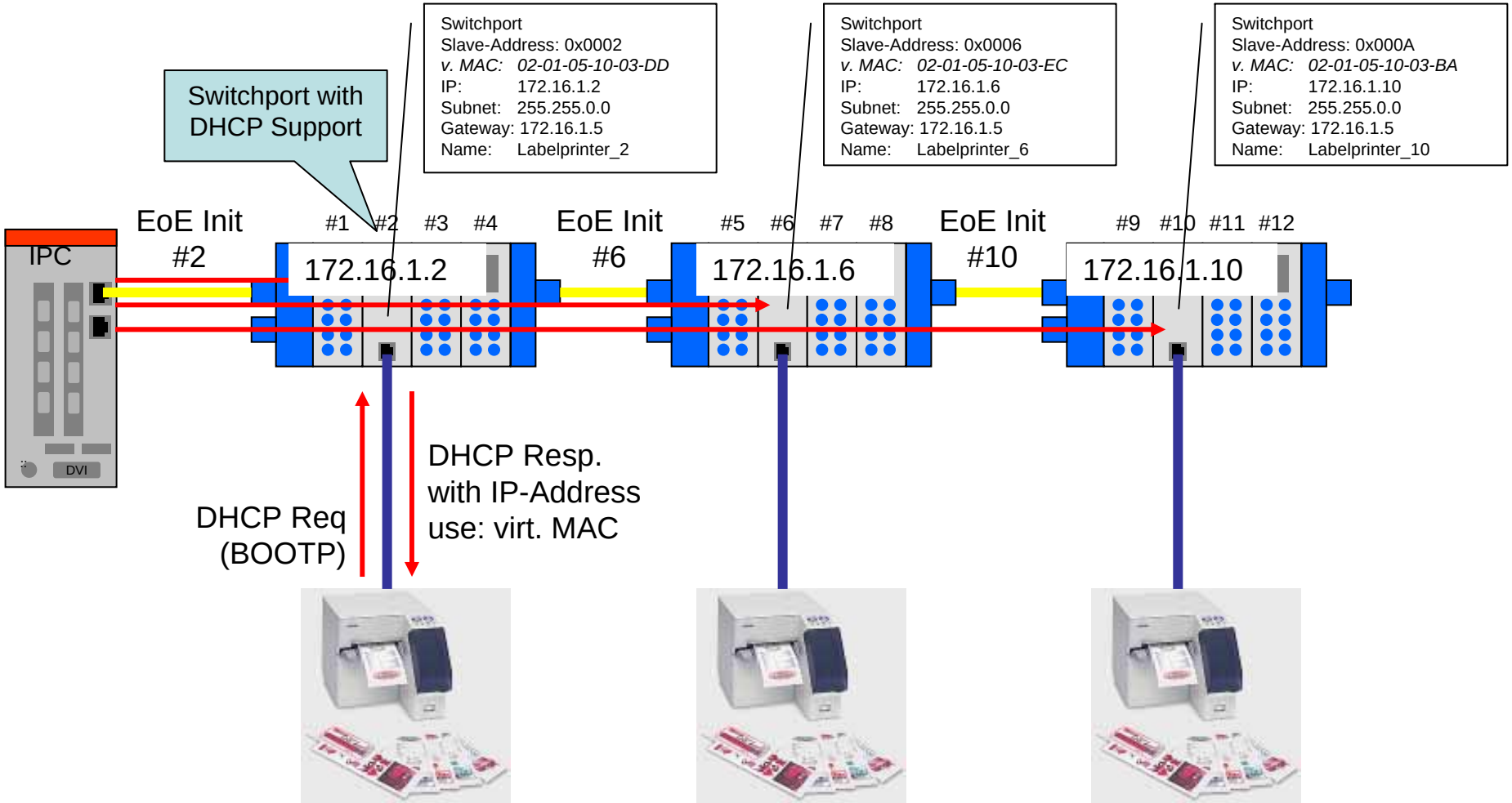

© EtherCAT Technology Group

Purpose of Ethernet over EtherCAT (EoE)

EtherCAT Basics
Slave Structure
Device Model (ISO/OSI)
Physical Layer
Data Link Layer
Frame Structure
Addressing
Commands
Memory/Registers
SyncManager
FMMU
Diagnosis
Distributed Clocks
Application Layer
State Machine
Mailbox
Mailbox Interface
EoE Ethernet
CoE CANopen
FoE File Access
SoE Servo Drive
ESI: Device Description
SII: Slave Information /IF
Device Profiles
Modular Devices
Drives
Configuration Tool
EtherCAT Master
Standards&Implementation

- Tunnels transparently Ethernet Frames over EtherCAT
- Tunneling reduces the cycle times without restrictions and to optimized available bandwidth
- Used for devices with TCP/IP stacks (e.g. Web Server) and for infrastructure devices like Switch Terminals
- Allows to access corresponding devices in the normal IP network in combination with a ‘Virtual Ethernet Switch’ (Layer 2) on the master side

© EtherCAT Technology Group

EoE – Switchport: Any Ethernet Protocol

EtherCAT Basics
Slave Structure
Device Model (ISO/OSI)
Physical Layer
Data Link Layer
- Frame Structure
- Addressing
- Commands
- Memory/Registers
- SyncManager
- FMMU
- Diagnosis

Distributed Clocks
Application Layer
- State Machine

Mailbox
- Mailbox Interface
- EoE Ethernet
- CoE CANopen
- FoE File Access
- SoE Servo Drive

ESI: Device Description
SII: Slave Information /IF
Device Profiles
- Modular Devices
- Drives

Configuration Tool
EtherCAT Master
Standards&Implementation

- Interface to any Ethernet Device or Network
- Ethernet Frames are inserted into EtherCAT Protocol:
  - ‘Ethernet over EtherCAT’

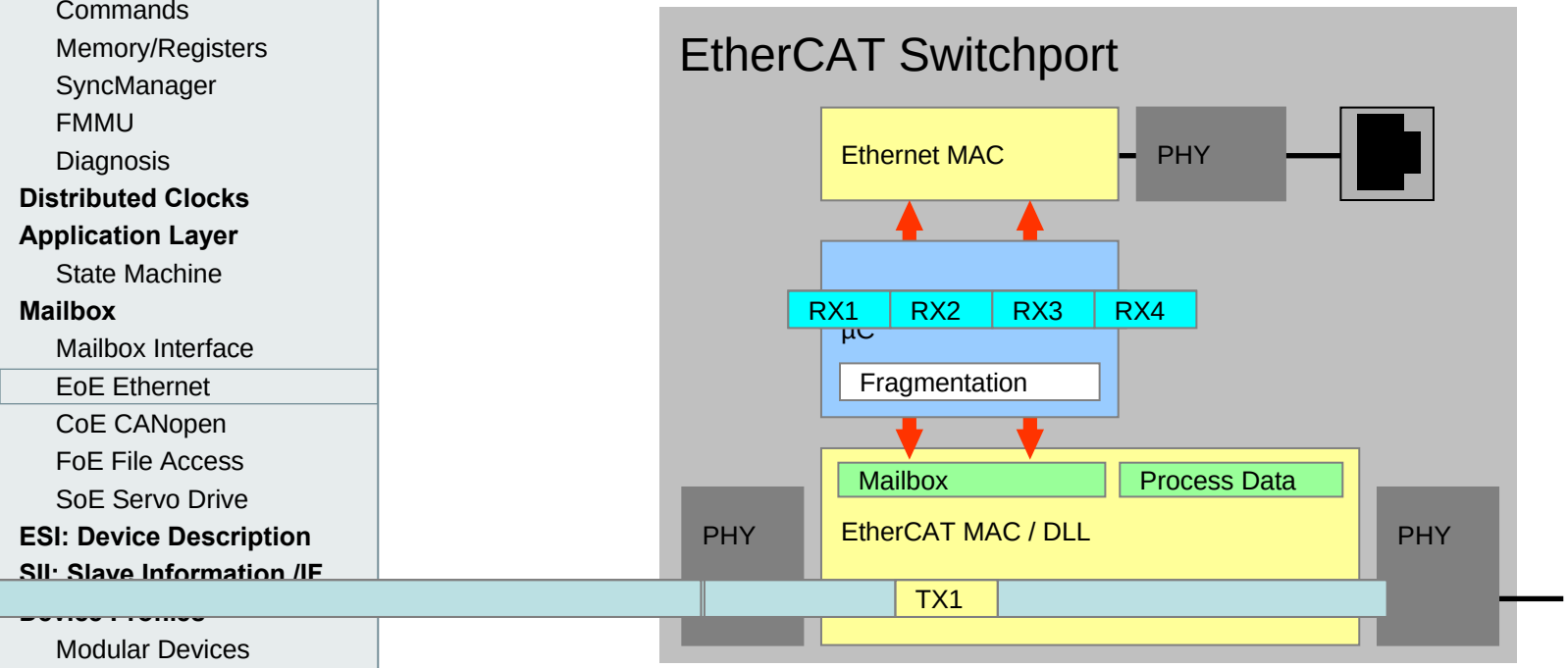

© EtherCAT Technology Group

EoE – Frame Header

EtherCAT Basics
Slave Structure
Device Model (ISO/OSI)
Physical Layer
Data Link Layer
- Frame Structure
- Addressing
- Commands
- Memory/Registers
- SyncManager
- FMMU
- Diagnosis

Distributed Clocks
Application Layer
- State Machine

Mailbox
- Mailbox Interface
- EoE Ethernet
- CoE CANopen
- FoE File Access
- SoE Servo Drive

ESI: Device Description
SII: Slave Information /IF
Device Profiles
- Modular Devices
- Drives

Configuration Tool
EtherCAT Master
Standards&Implementation

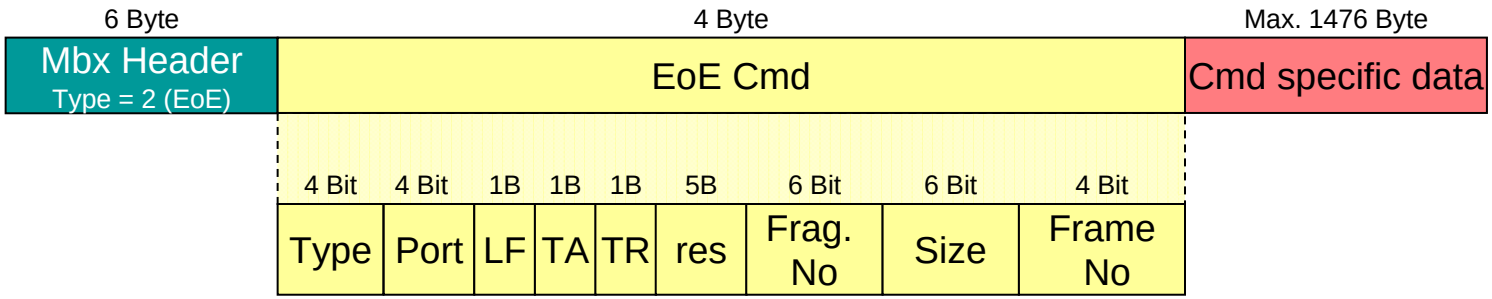

Type	**EoE Frame Type** **0x00 EoE Fragment Request** **0x01 Initiate EoE Request** **0x02 IP Parameter Request** **0x03 IP Parameter Response** **0x04 Set MAC Address Filter Request** **0x05 Set MAC Address Filter Response**
Port	**Selected Port**
LF	**Last fragment**
TA	**Time stamp appended (only if LF=1)**
TR	**Time stamp request**
Fragment No	**Fragment Number of the Ethernet Frame fragment**
Size	**Complete size of Ethernet Frame**
Frame No	**Number of the Ethernet Frame**

© EtherCAT Technology Group

EoE Header

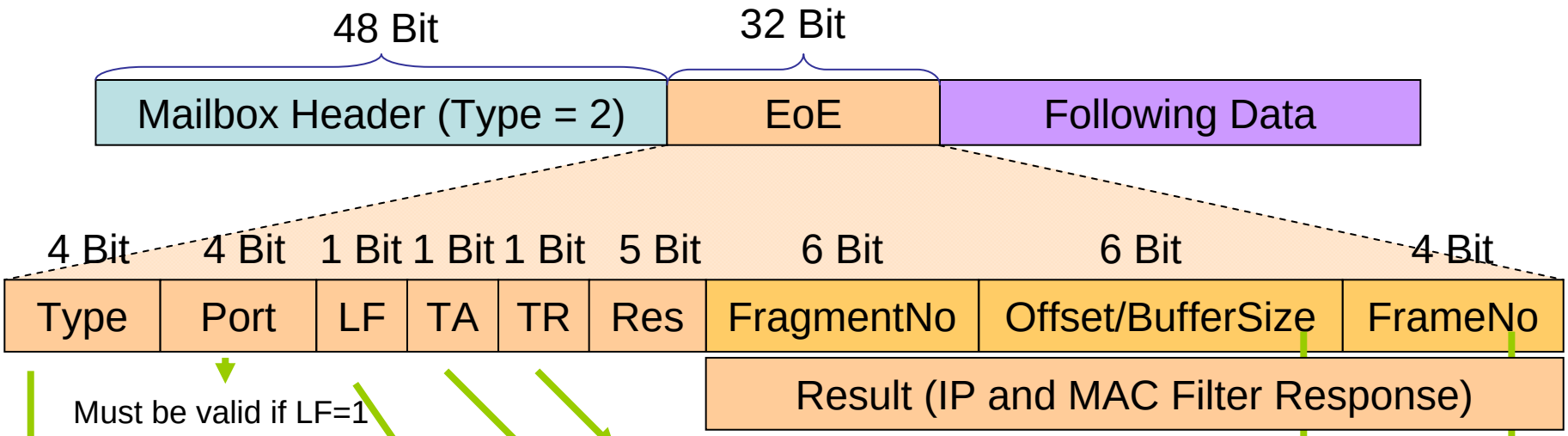

Must be valid if LF=1
0 = unspecified
1 = Send/Received on Port 1
2 = Send/Received on Port 2
…

Timestamp requested

Timestamp appended (only if LF=1)

0 = Frame Fragments follows
1 = Time Stamp Response follows
2 = IP Settings Req follows
3 = IP Settings Res follows
4 = MAC Filter Settings Req follows
5 = MAC Filter Settings Res follows
6-15 = Reserved

FragmentNo = 0: Contains needed buffer size
FragmentNo > 0: Offset of the fragment
(Multiplied with 32)

FrameNo: Increments each new Ethernet Frame

Last Fragment: Indicates the last fragment (Type=0 only)

© EtherCAT Technology Group

EoE – Frames

EoE (Mbx Type = 2)

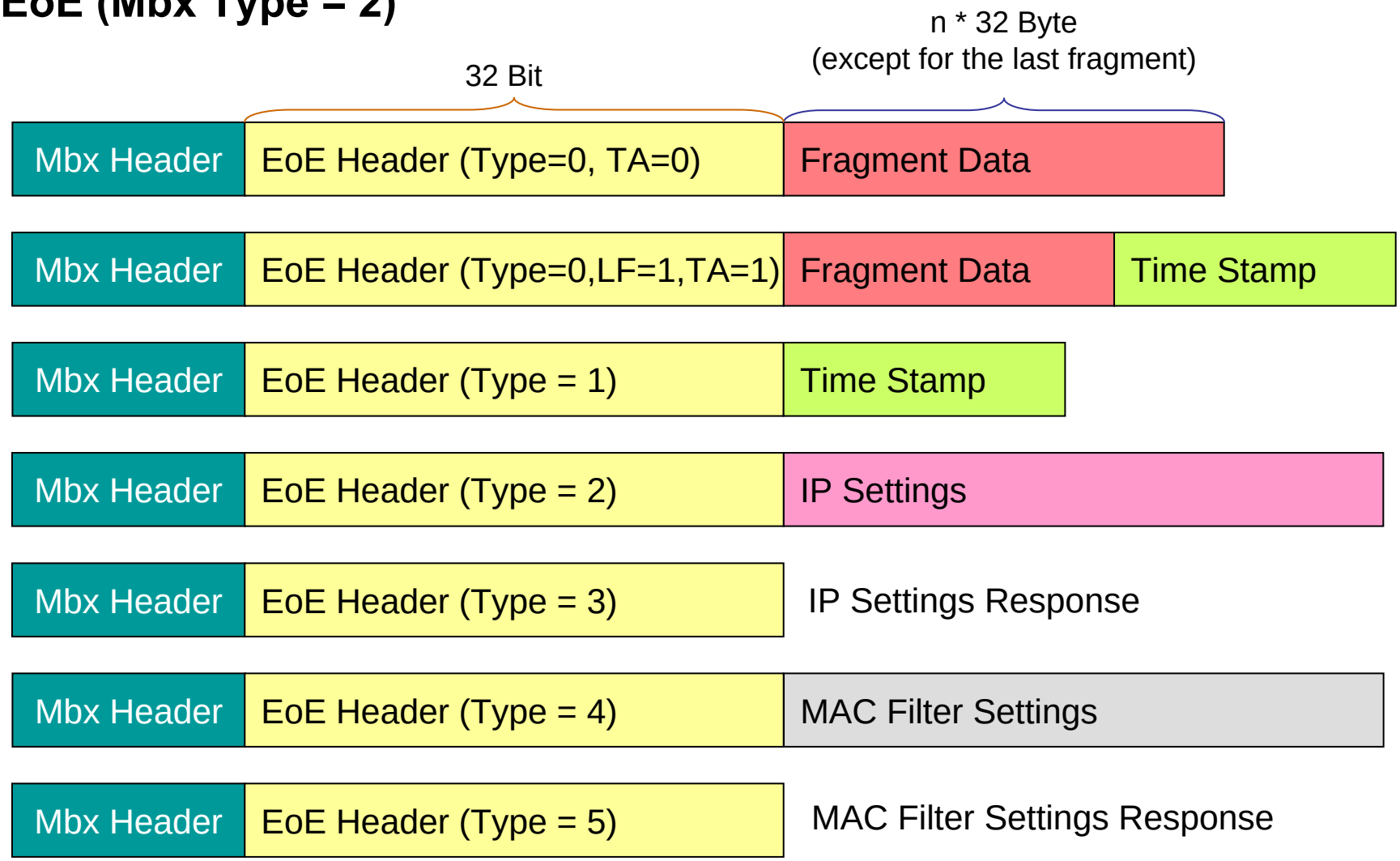

© EtherCAT Technology Group

EoE – IP Address & MAC

EtherCAT Basics
Slave Structure
Device Model (ISO/OSI)
Physical Layer
Data Link Layer
Frame Structure
Addressing
Commands
Memory/Registers
SyncManager
FMMU
Diagnosis
Distributed Clocks
Application Layer
State Machine
Mailbox
Mailbox Interface
EoE Ethernet
CoE CANopen
FoE File Access
SoE Servo Drive
ESI: Device Description
SII: Slave Information /IF
Device Profiles
Modular Devices
Drives
Configuration Tool
EtherCAT Master
Standards&Implementation

- Set MAC and IP address if EtherCAT device has IP stack
- MAC Filter Settings Data Structure:
  Used if EtherCAT device acts as bridge (switch)
- Result Values (IP and MAC Filter Settings only):
  - 0x0000 No Error
  - 0x0001 Unspecified Error
  - 0x0002 Unsupported Type
  - 0x0201 No IP Support
  - 0x0401 No MAC Filter Mask Support
  - …

© EtherCAT Technology Group

EoE – Time Stamp

EtherCAT Basics
Slave Structure
Device Model (ISO/OSI)
Physical Layer
Data Link Layer
Frame Structure
Addressing
Commands
Memory/Registers
SyncManager
FMMU
Diagnosis
Distributed Clocks
Application Layer
State Machine
Mailbox
Mailbox Interface
EoE Ethernet
CoE CANopen
FoE File Access
SoE Servo Drive
ESI: Device Description
SII: Slave Information /IF
Device Profiles
Modular Devices
Drives
Configuration Tool
EtherCAT Master
Standards&Implementation

- Time Stamp
  - 32 Bit Timing information with 1 ns resolution
  - DC System Time if available (Register 910h)
  - Time stamp trigger is the beginning of Destination Address (DA) in the Ethernet Frame

- Time stamp appended (TA = 1)
  - Slave to Master:
    Time stamp contains exact receive time
  - Master to Slave:
    Time Stamp contains desired send time
  - Time stamp extends frame data by 32 Bit
  - TA is allowed in last fragment only (LF = 1).
    If necessary, add additional fragment
    - fill the “last” fragment with parts of the Time Stamp (LF=0, TA=0) and send a very last fragment with the rest of the Time Stamp (LF=1, TA=1)
  - Slave should always append a Time Stamp if it has this feature

© EtherCAT Technology Group

EoE – Time Stamp

EtherCAT Basics
Slave Structure
Device Model (ISO/OSI)
Physical Layer
Data Link Layer
Frame Structure
Addressing
Commands
Memory/Registers
SyncManager
FMMU
Diagnosis
Distributed Clocks
Application Layer
State Machine
Mailbox
Mailbox Interface
EoE Ethernet
CoE CANopen
FoE File Access
SoE Servo Drive
ESI: Device Description
SII: Slave Information /IF
Device Profiles
Modular Devices
Drives
Configuration Tool
EtherCAT Master
Standards&Implementation

- Time Stamp requested (TR = 1)
  - Response with the exact send time and the same FrameNo requested
  - Response should be send as soon as possible
  - Can be used for segment to segment synchronization

© EtherCAT Technology Group

EoE – Error Handling

EtherCAT Basics
Slave Structure
Device Model (ISO/OSI)
Physical Layer
Data Link Layer
Frame Structure
Addressing
Commands
Memory/Registers
SyncManager
FMMU
Diagnosis
Distributed Clocks
Application Layer
State Machine
Mailbox
Mailbox Interface
EoE Ethernet
CoE CANopen
FoE File Access
SoE Servo Drive
ESI: Device Description
SII: Slave Information /IF
Device Profiles
Modular Devices
Drives
Configuration Tool
EtherCAT Master
Standards&Implementation

- No special Error Handling required!
- EoE is a Layer 2 Protocol – logical like an Ethernet Switch
- If a fragment is missing, the whole frame will be discarded
- Frame loss is recognized at higher levels

© EtherCAT Technology Group

Purpose of CAN application protocol over EtherCAT (CoE)

EtherCAT Basics
Slave Structure
Device Model (ISO/OSI)
Physical Layer
Data Link Layer
Frame Structure
Addressing
Commands
Memory/Registers
SyncManager
FMMU
Diagnosis
Distributed Clocks
Application Layer
State Machine
Mailbox
Mailbox Interface
EoE Ethernet
CoE CANopen
FoE File Access
SoE Servo Drive
ESI: Device Description
SII: Slave Information /IF
Device Profiles
Modular Devices
Drives
Configuration Tool
EtherCAT Master
Standards&Implementation

- Recommended protocol for Service Data Access
  - Configuration of communication parameter
  - Configuration of device specific parameter

- Easy migration path from CANopen* Devices to EtherCAT CoE Devices
  - Protocol Stacks can be re-used

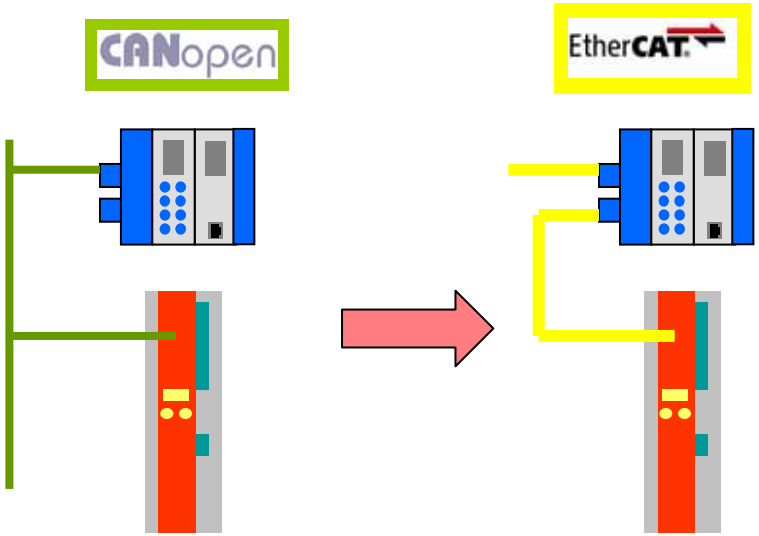

© EtherCAT Technology Group
* CANopen is a trademark of the CAN in Automation e.V.

CAN application protocol over EtherCAT Device Architecture

EtherCAT Basics
Slave Structure
Device Model (ISO/OSI)
Physical Layer
Data Link Layer
- Frame Structure
- Addressing
- Commands
- Memory/Registers
- SyncManager
- FMMU
- Diagnosis

Distributed Clocks
Application Layer
- State Machine

Mailbox
- Mailbox Interface
- EoE Ethernet
- CoE CANopen
- FoE File Access
- SoE Servo Drive

ESI: Device Description
SII: Slave Information /IF
Device Profiles
- Modular Devices
- Drives

Configuration Tool
EtherCAT Master
Standards&Implementation

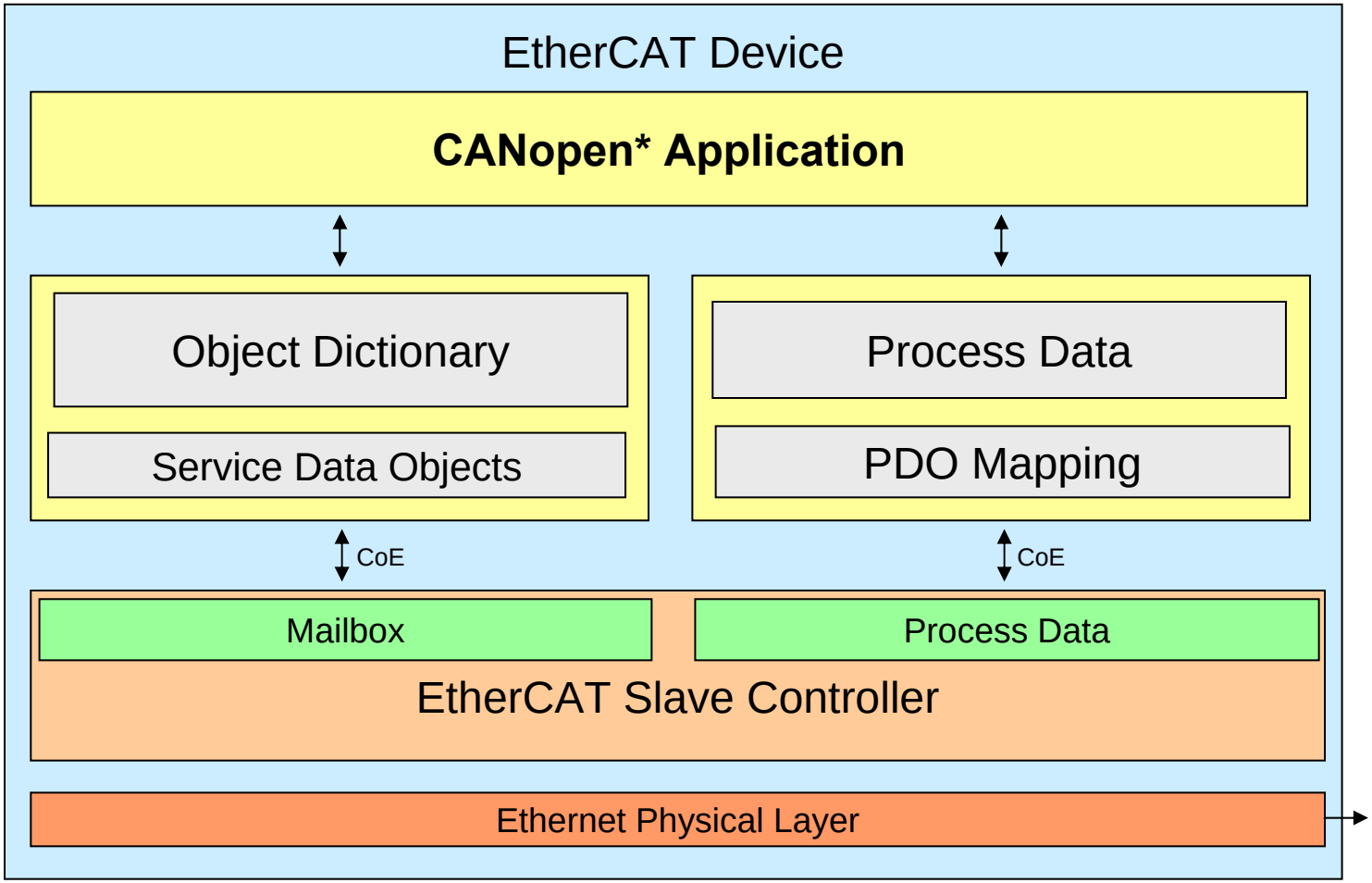

© EtherCAT Technology Group
* CANopen is a trademark of the CAN in Automation e.V.

CoE –Frame Header

EtherCAT Basics
Slave Structure
Device Model (ISO/OSI)
Physical Layer
Data Link Layer
- Frame Structure
- Addressing
- Commands
- Memory/Registers
- SyncManager
- FMMU
- Diagnosis

Distributed Clocks
Application Layer
- State Machine

Mailbox
- Mailbox Interface
- EoE Ethernet
- CoE CANopen
- FoE File Access
- SoE Servo Drive

ESI: Device Description
SII: Slave Information /IF
Device Profiles
- Modular Devices
- Drives

Configuration Tool
EtherCAT Master
Standards&Implementation

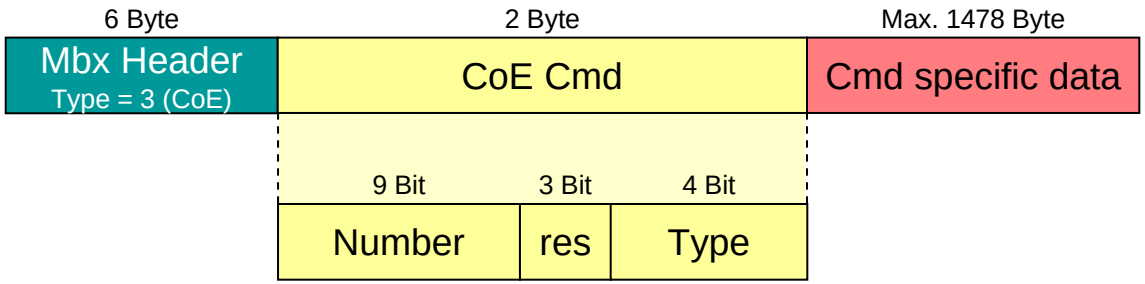

Number	PDO Number (PDO transfer only)
Type	**Message Type** 0 reserverd 1 Emergency Message **2 SDO Request** **3 SDO Response** 4 TxPDO 5 RxPDO 6 Remote transmission request of TxPDO 7 Remote transmission request of RxPDO **8 SDO information** 9-15 reserved for future use

© EtherCAT Technology Group

CAN application profile over EtherCAT (CoE)

EtherCAT Basics
Slave Structure
Device Model (ISO/OSI)
Physical Layer
Data Link Layer
Frame Structure
Addressing
Commands
Memory/Registers
SyncManager
FMMU
Diagnosis
Distributed Clocks
Application Layer
State Machine
Mailbox
Mailbox Interface
EoE Ethernet
CoE CANopen
FoE File Access
SoE Servo Drive
ESI: Device Description
SII: Slave Information /IF
Device Profiles
Modular Devices
Drives
Configuration Tool
EtherCAT Master
Standards&Implementation

- **SDO: Access to a CANopen* object dictionary ✓**
  - **Download and Upload of parameters**
  - **Standard Process Data Mapping (PDO Mapping)**
  - **Full Access to CANopen* Profiles**

- PDO: Process Data Objects (over CoE!) ✓
  - Direct PDO transfer
  - Remote Transmission Requests of PDOs
- Emergency Messages ✓ (not used)

Standard CANopen Features*

- **+** Object Dictionary Information (SDO Information)
  - Upload of object dictionary (identifier lists)
  - Upload of object description
  - Upload of entry descriptions

© EtherCAT Technology Group
* CANopen is a trademark of the CAN in Automation e.V.

CoE – Standard CANopen* Frames

EtherCAT Basics
Slave Structure
Device Model (ISO/OSI)
Physical Layer
Data Link Layer
- Frame Structure
- Addressing
- Commands
- Memory/Registers
- SyncManager
- FMMU
- Diagnosis

Distributed Clocks
Application Layer
- State Machine

Mailbox
- Mailbox Interface
- EoE Ethernet
- CoE CANopen
- FoE File Access
- SoE Servo Drive

ESI: Device Description
SII: Slave Information /IF
Device Profiles
- Modular Devices
- Drives

Configuration Tool
EtherCAT Master
Standards&Implementation

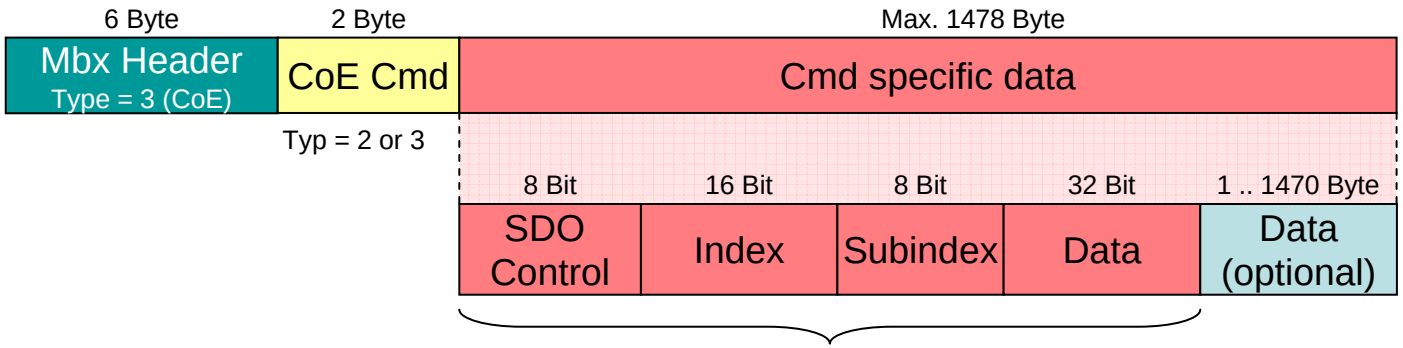

Standard CANopen* Frame

SDO Control	**Standard CANopen* SDO Services**
Index	**Object Addressing by Index …**
Subindex	**… and Subindex**
Data	**Data for the SDO-Service**
Data (optional)	**Optionally more than 4 bytes of data can be sent with one frame. Full mailbox size usable**

© EtherCAT Technology Group
* CANopen is a trademark of the CAN in Automation e.V.

Object Dictionary – Example CoE Drive

EtherCAT Basics
Slave Structure
Device Model (ISO/OSI)
Physical Layer
Data Link Layer
- Frame Structure
- Addressing
- Commands
- Memory/Registers
- SyncManager
- FMMU
- Diagnosis

Distributed Clocks
Application Layer
- State Machine

Mailbox
- Mailbox Interface
- EoE Ethernet
- CoE CANopen
- FoE File Access
- SoE Servo Drive

ESI: Device Description
SII: Slave Information /IF
Device Profiles
- Modular Devices
- Drives

Configuration Tool
EtherCAT Master
Standards&Implementation

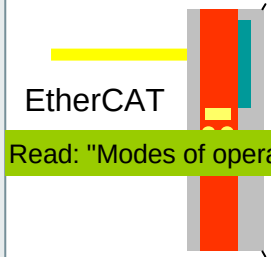

Read: "Modes of operation display"

Parameter list

Name	Index	Typ	Subindex (SI)	
Controlword	0x6040	Variable	*No Subindex available*	
Statusword	0x6041			
Target position	0x607A			
Target velocity	0x60FF			
Position actual value	0x6064		Number of SIs	0x607B SI0
Position Range limit	0x607B	Array	Min Pos. Range limit	0x607B SI1
Modes of operation	0x6060		Max Pos. Range limit	0x607B SI2
Modes of operation display	0x6061			
Following error actual value	0x60F4			
Following error window	0x6065			
Gear Ratio	0x6091			
			Number of SIs	0x1018 SI0
Device Type	0x1000		Vendor ID	0x1018 SI1
Identity object	0x1018	Record	Product Code	0x1018 SI2
			Revision Number	0x1018 SI3
			Serial Number	0x1018 SI4

© EtherCAT Technology Group

Object Dictionary – Example CoE Drive

EtherCAT Basics
Slave Structure
Device Model (ISO/OSI)
Physical Layer
Data Link Layer
- Frame Structure
- Addressing
- Commands
- Memory/Registers
- SyncManager
- FMMU
- Diagnosis

Distributed Clocks
Application Layer
- State Machine

Mailbox
- Mailbox Interface
- EoE Ethernet
- CoE CANopen
- FoE File Access
- SoE Servo Drive

ESI: Device Description
SII: Slave Information /IF
Device Profiles
- Modular Devices
- Drives

Configuration Tool
EtherCAT Master
Standards&Implementation

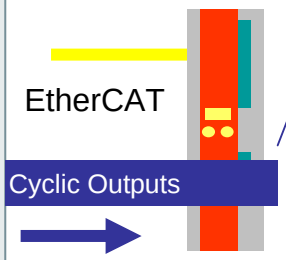

Parameter list

Name	Index
Controlword	0x6040
Statusword	0x6041
Target position	0x607A
Target velocity	0x60FF
Position actual value	0x6064
Position Range limit	0x607B
Modes of operation	0x6060
Modes of operation display	0x6061
Following error actual value	0x60F4
Following error window	0x6065
Gear Ratio	0x6091

Device Type	0x1000
Identity object	0x1018

Process Data Info

Output Mapping (RxPDO)	0x1600	Record

No of SI's	=	3		
1st RxPDO	=	0x6040	00	10
2nd RxPDO	=	0x60FF	00	20
3rd RxPDO	=	0x6060	00	10

Index Subindex Bitlength

assembly of RxPDO

© EtherCAT Technology Group

Object Dictionary – Example CoE Drive

EtherCAT Basics
Slave Structure
Device Model (ISO/OSI)
Physical Layer
Data Link Layer
- Frame Structure
- Addressing
- Commands
- Memory/Registers
- SyncManager
- FMMU
- Diagnosis

Distributed Clocks
Application Layer
- State Machine

Mailbox
- Mailbox Interface
- EoE Ethernet
- CoE CANopen
- FoE File Access
- SoE Servo Drive

ESI: Device Description
SII: Slave Information /IF
Device Profiles
- Modular Devices
- Drives

Configuration Tool
EtherCAT Master
Standards&Implementation

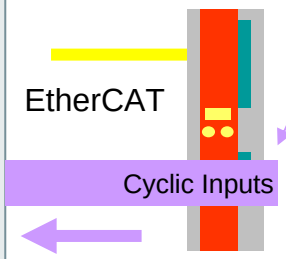

Parameterlist

Name	Index
Controlword	0x6040
Statusword	0x6041
Target position	0x607A
Target velocity	0x60FF
Position actual value	0x6064
Position Range limit	0x607B
Modes of operation	0x6060
Modes of operation display	0x6061
Following error actual value	0x60F4
Following error window	0x6065
Gear Ratio	0x6091

Device Type	0x1000
Identity object	0x1018

Process Data Info

Output Mapping (RxPDO)	0x1600	
Input Mapping (TxPDO)	0x1A00	Record

assembly of TxPDO

No of SI's	= 3
1st TxPDO	= 0x6041 00 10
2nd RxPDO	= 0x6064 00 20
3rd RxPDO	= 0x6061 00 10

© EtherCAT Technology Group

Addressing through DL and AL
SDO Access: Download Request

EtherCAT Basics
Slave Structure
Device Model (ISO/OSI)
Physical Layer
Data Link Layer
- Frame Structure
- Addressing
- Commands
- Memory/Registers
- SyncManager
- FMMU
- Diagnosis

Distributed Clocks
Application Layer
- State Machine

Mailbox
- Mailbox Interface
- EoE Ethernet
- CoE CANopen
- FoE File Access
- SoE Servo Drive

ESI: Device Description
SII: Slave Information /IF
Device Profiles
- Modular Devices
- Drives

Configuration Tool
EtherCAT Master
Standards&Implementation

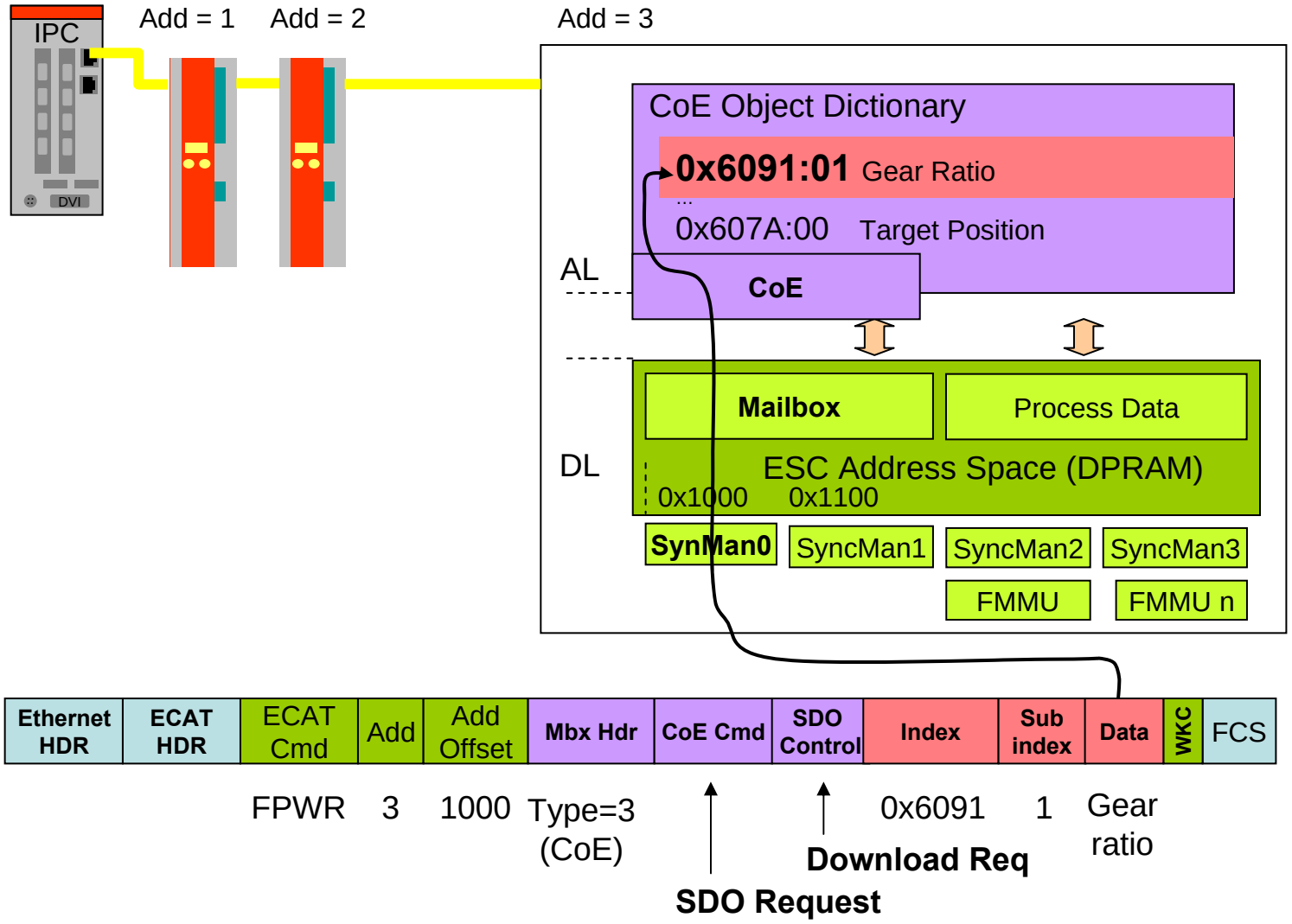

© EtherCAT Technology Group

Addressing through DL and AL
SDO Access: Download Response

EtherCAT Basics
Slave Structure
Device Model (ISO/OSI)
Physical Layer
Data Link Layer
- Frame Structure
- Addressing
- Commands
- Memory/Registers
- SyncManager
- FMMU
- Diagnosis

Distributed Clocks
Application Layer
- State Machine

Mailbox
- Mailbox Interface
- EoE Ethernet
- CoE CANopen
- FoE File Access
- SoE Servo Drive

ESI: Device Description
SII: Slave Information /IF
Device Profiles
- Modular Devices
- Drives

Configuration Tool
EtherCAT Master
Standards&Implementation

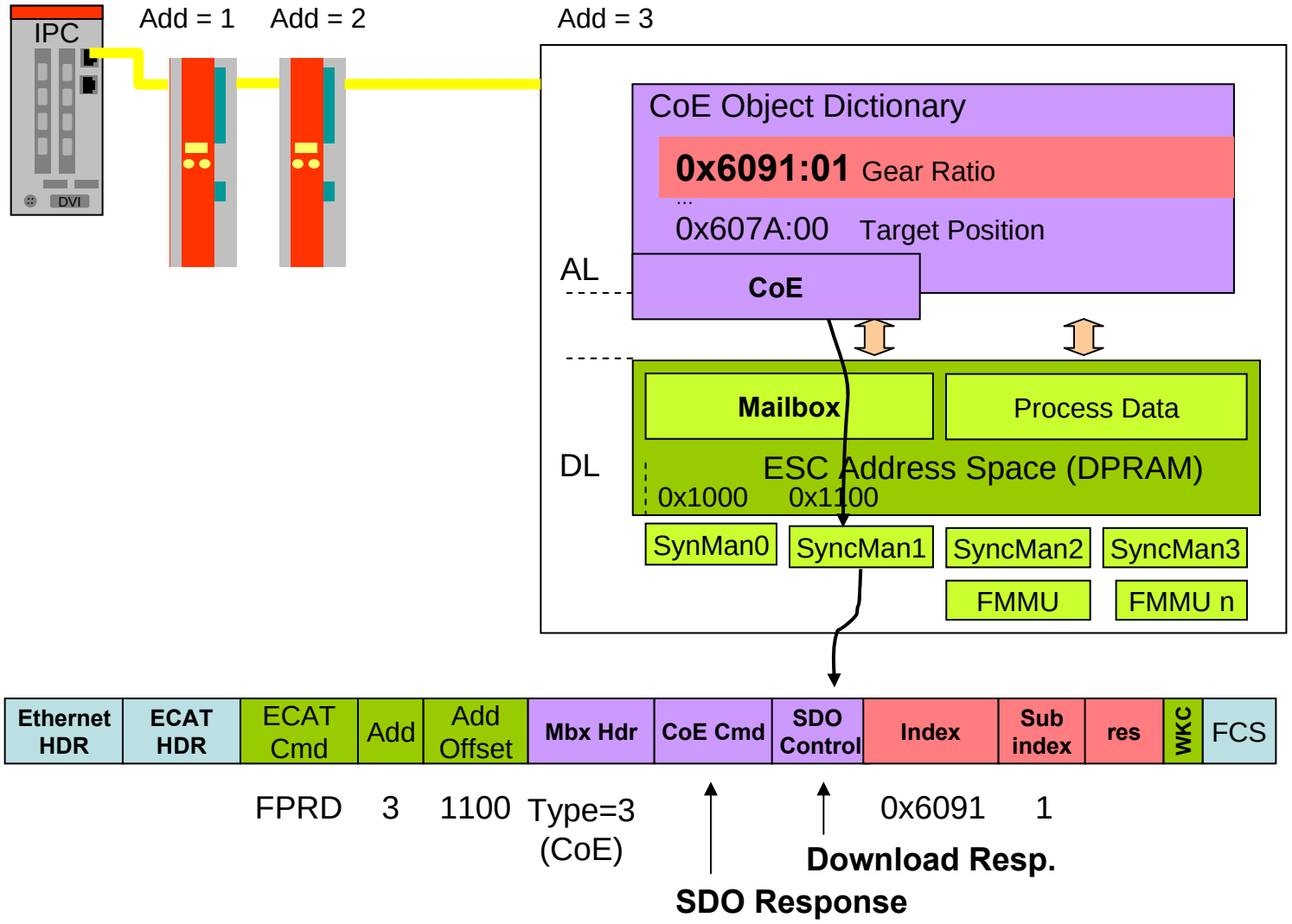

© EtherCAT Technology Group

Addressing through DL and AL (PDO Access)

EtherCAT Basics
Slave Structure
Device Model (ISO/OSI)
Physical Layer
Data Link Layer
- Frame Structure
- Addressing
- Commands
- Memory/Registers
- SyncManager
- FMMU
- Diagnosis

Distributed Clocks
Application Layer
- State Machine

Mailbox
- Mailbox Interface
- EoE Ethernet
- CoE CANopen
- FoE File Access
- SoE Servo Drive

ESI: Device Description
SII: Slave Information /IF
Device Profiles
- Modular Devices
- Drives

Configuration Tool
EtherCAT Master
Standards&Implementation

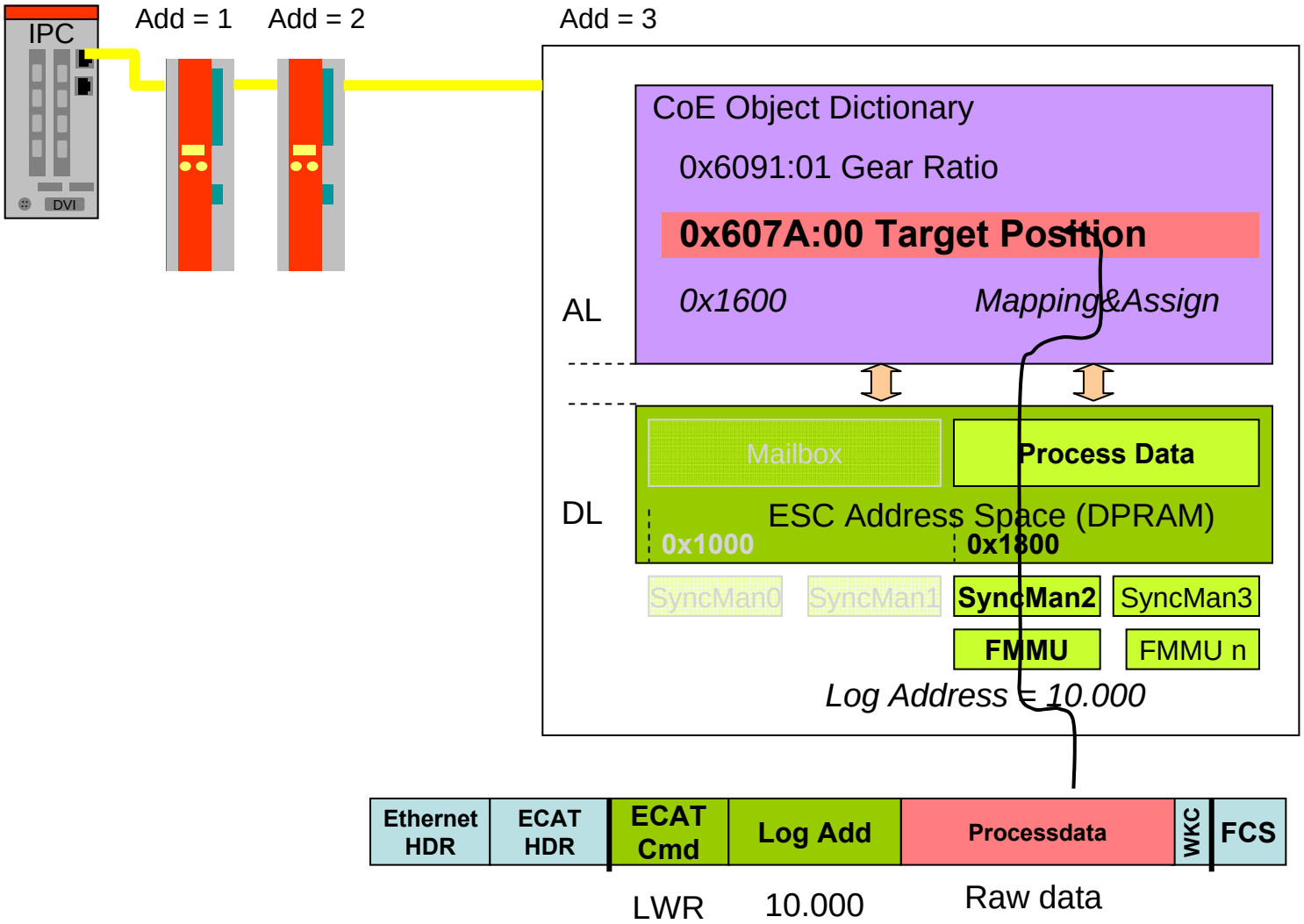

© EtherCAT Technology Group

Example: ‘Initiate SDO Download’ Request

EtherCAT Basics
Slave Structure
Device Model (ISO/OSI)
Physical Layer
Data Link Layer
- Frame Structure
- Addressing
- Commands
- Memory/Registers
- SyncManager
- FMMU
- Diagnosis

Distributed Clocks
Application Layer
- State Machine

Mailbox
- Mailbox Interface
- EoE Ethernet
- CoE CANopen
- FoE File Access
- SoE Servo Drive

ESI: Device Description
SII: Slave Information /IF
Device Profiles
- Modular Devices
- Drives

Configuration Tool
EtherCAT Master
Standards&Implementation

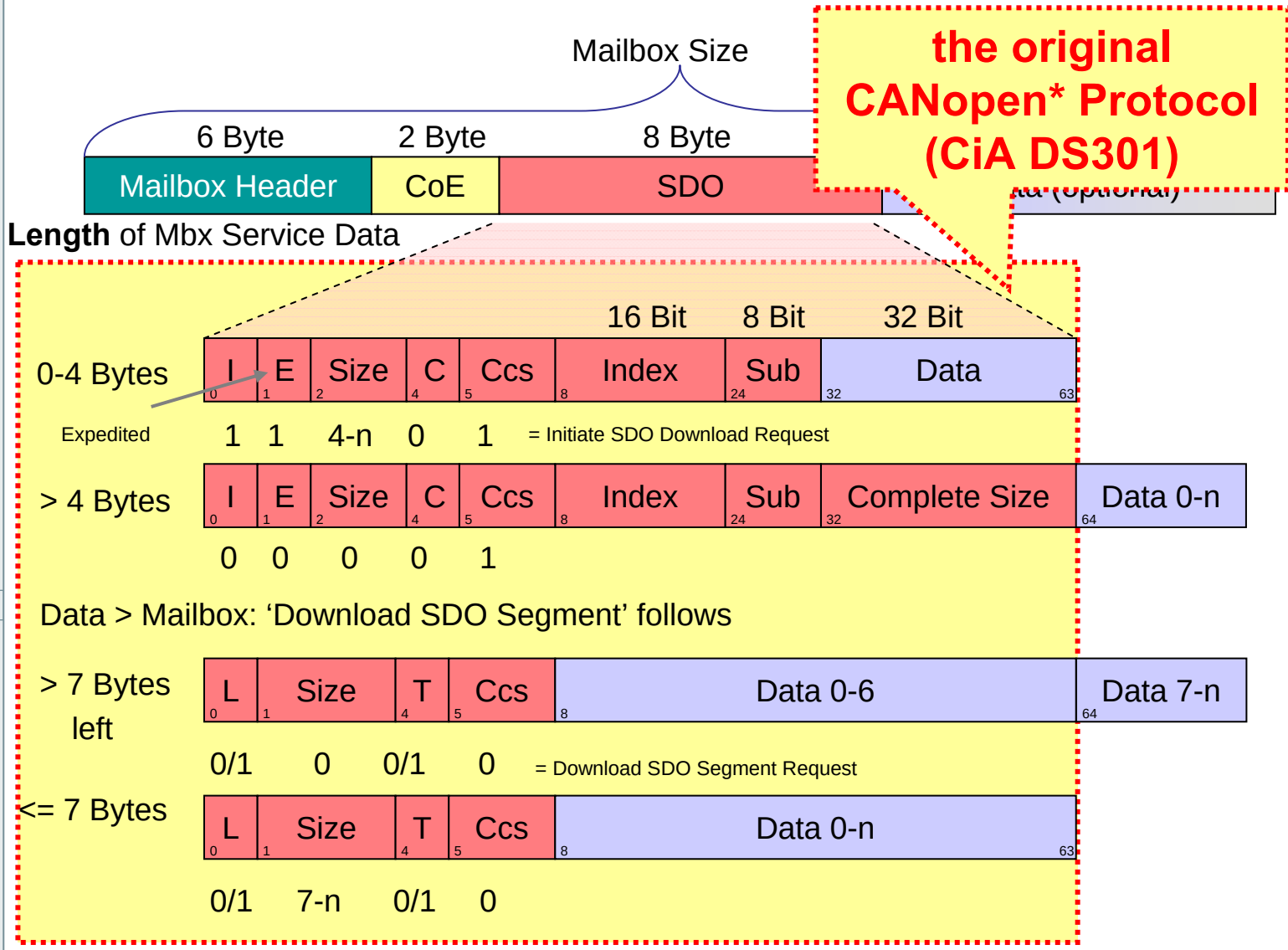

© EtherCAT Technology Group
* CANopen is a trademark of the CAN in Automation e.V.

SDO Download Services differences

EtherCAT Basics
Slave Structure
Device Model (ISO/OSI)
Physical Layer
Data Link Layer
- Frame Structure
- Addressing
- Commands
- Memory/Registers
- SyncManager
- FMMU
- Diagnosis

Distributed Clocks
Application Layer
- State Machine

Mailbox
- Mailbox Interface
- EoE Ethernet
- CoE CANopen
- FoE File Access
- SoE Servo Drive

ESI: Device Description
SII: Slave Information /IF
Device Profiles
- Modular Devices
- Drives

Configuration Tool
EtherCAT Master
Standards&Implementation

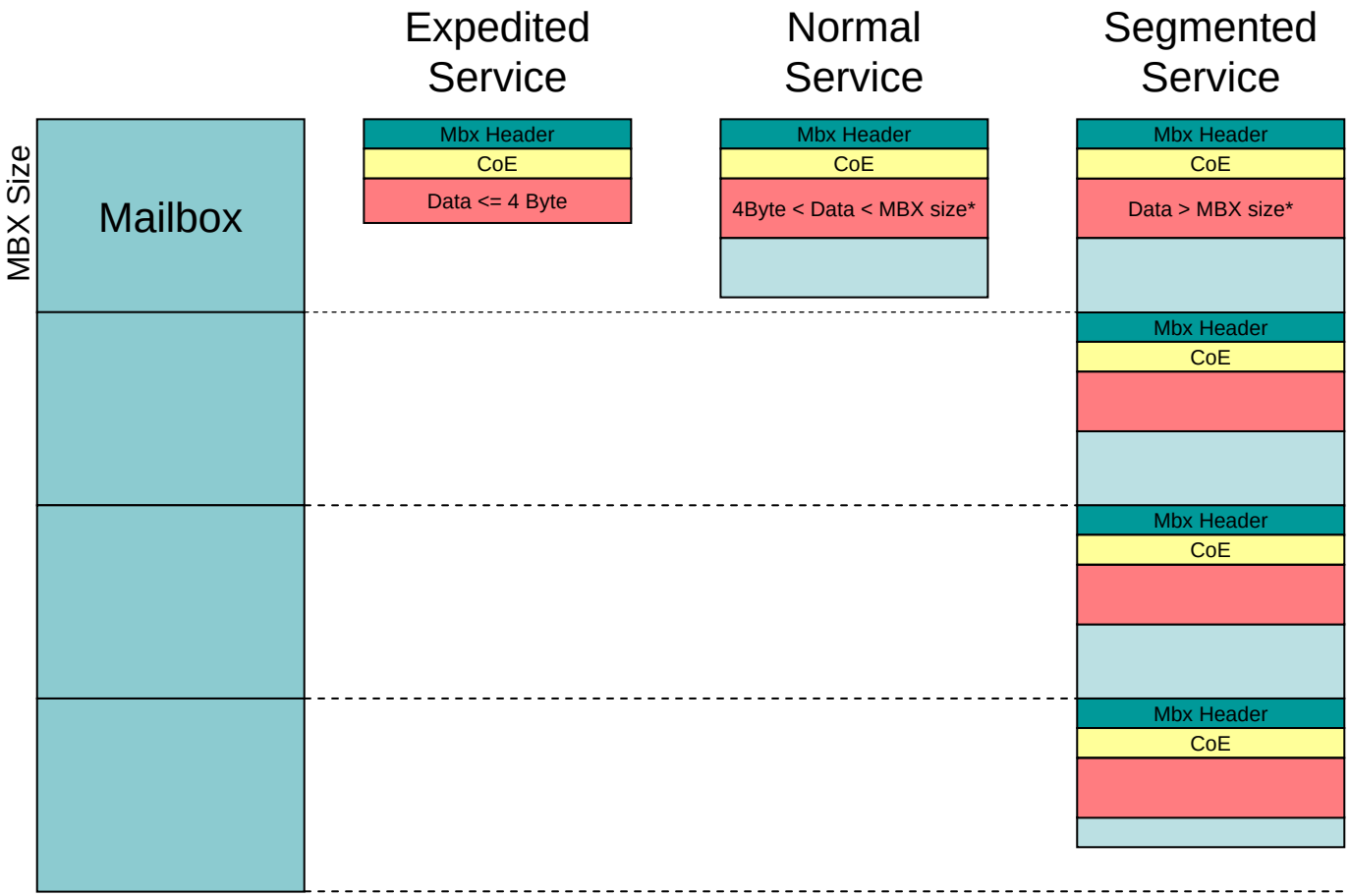

*MBX size = Mbx size – Mbx-Header – CoE-cmd – SDO-Cntrl – Index - Subindex

© EtherCAT Technology Group

Example: Expedited Download

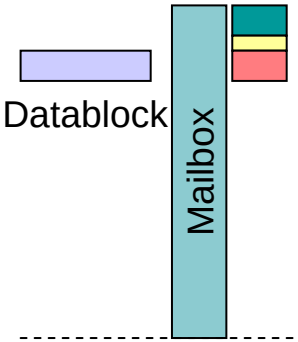

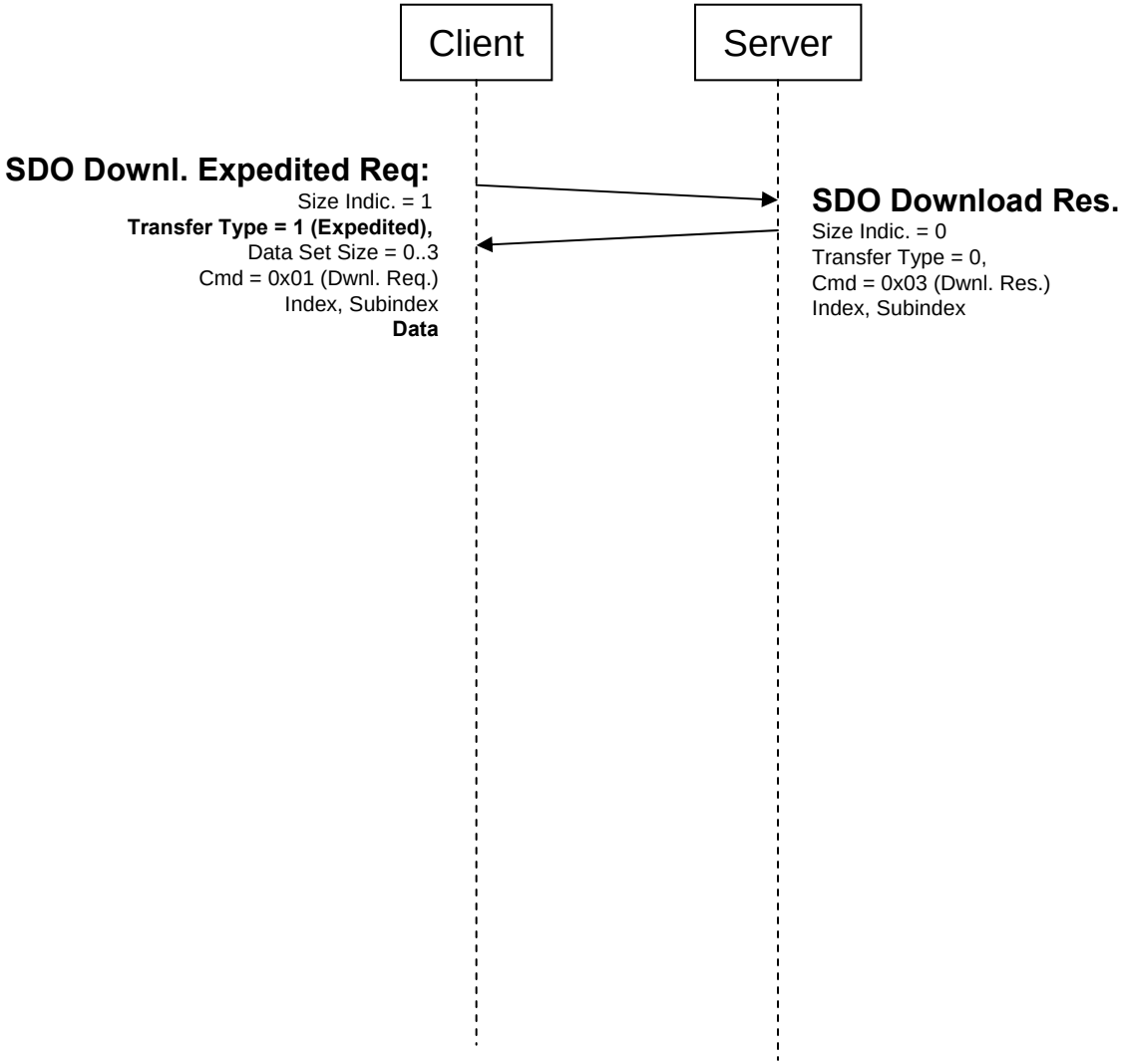

© EtherCAT Technology Group

Example: Normal Download

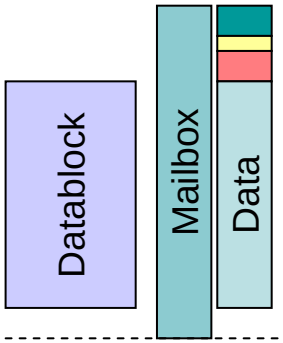

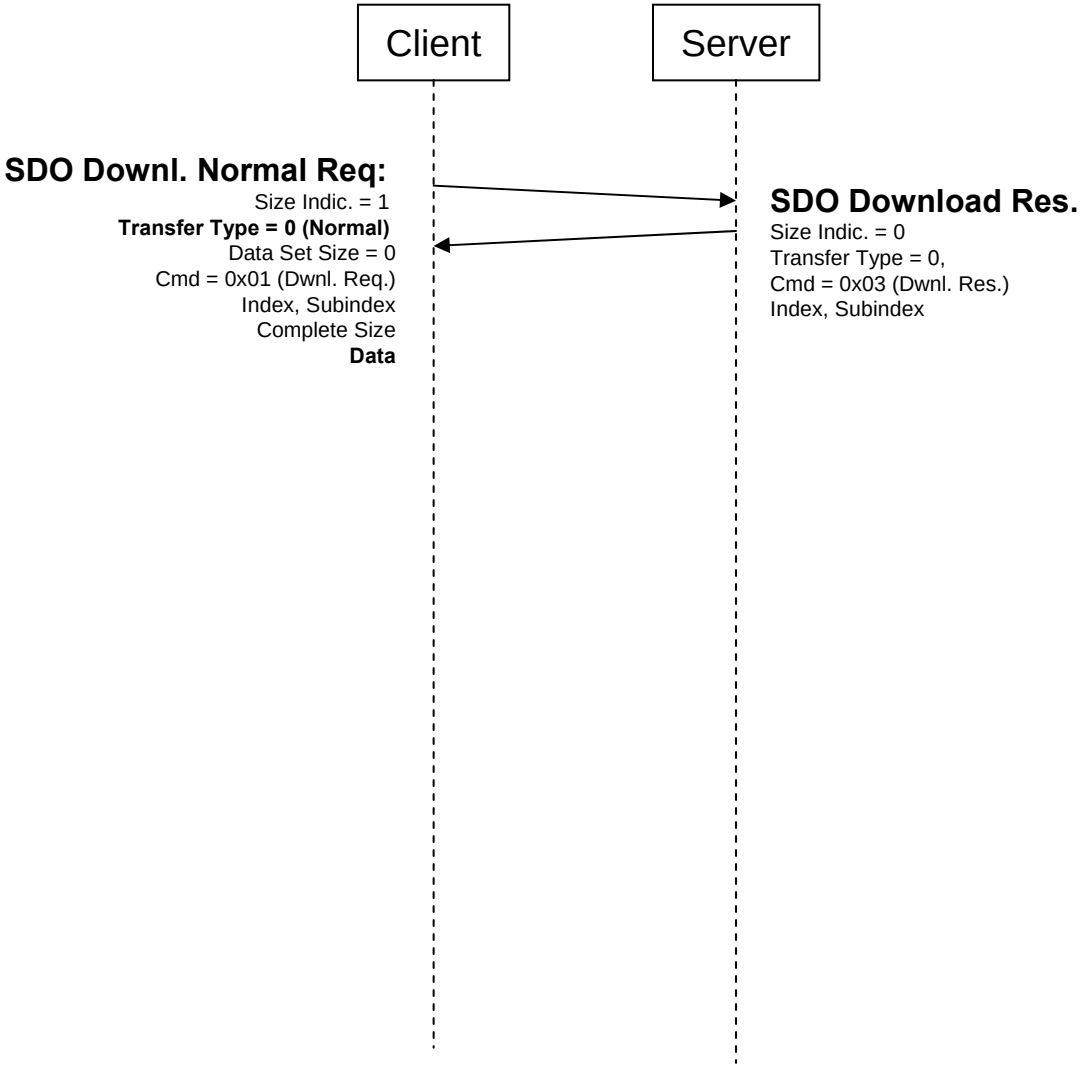

© EtherCAT Technology Group

Example: Segmented Download

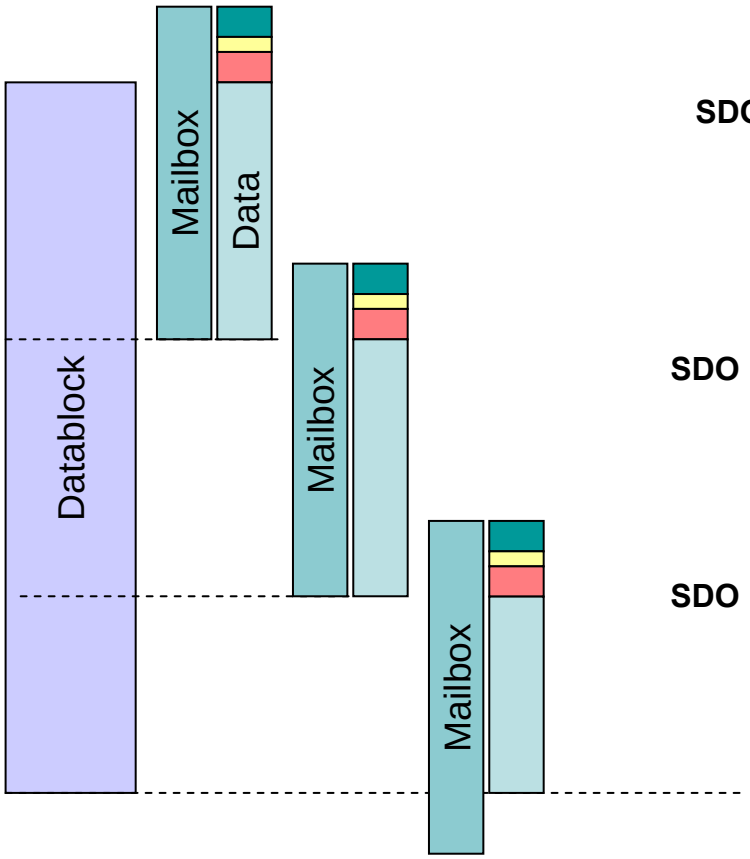

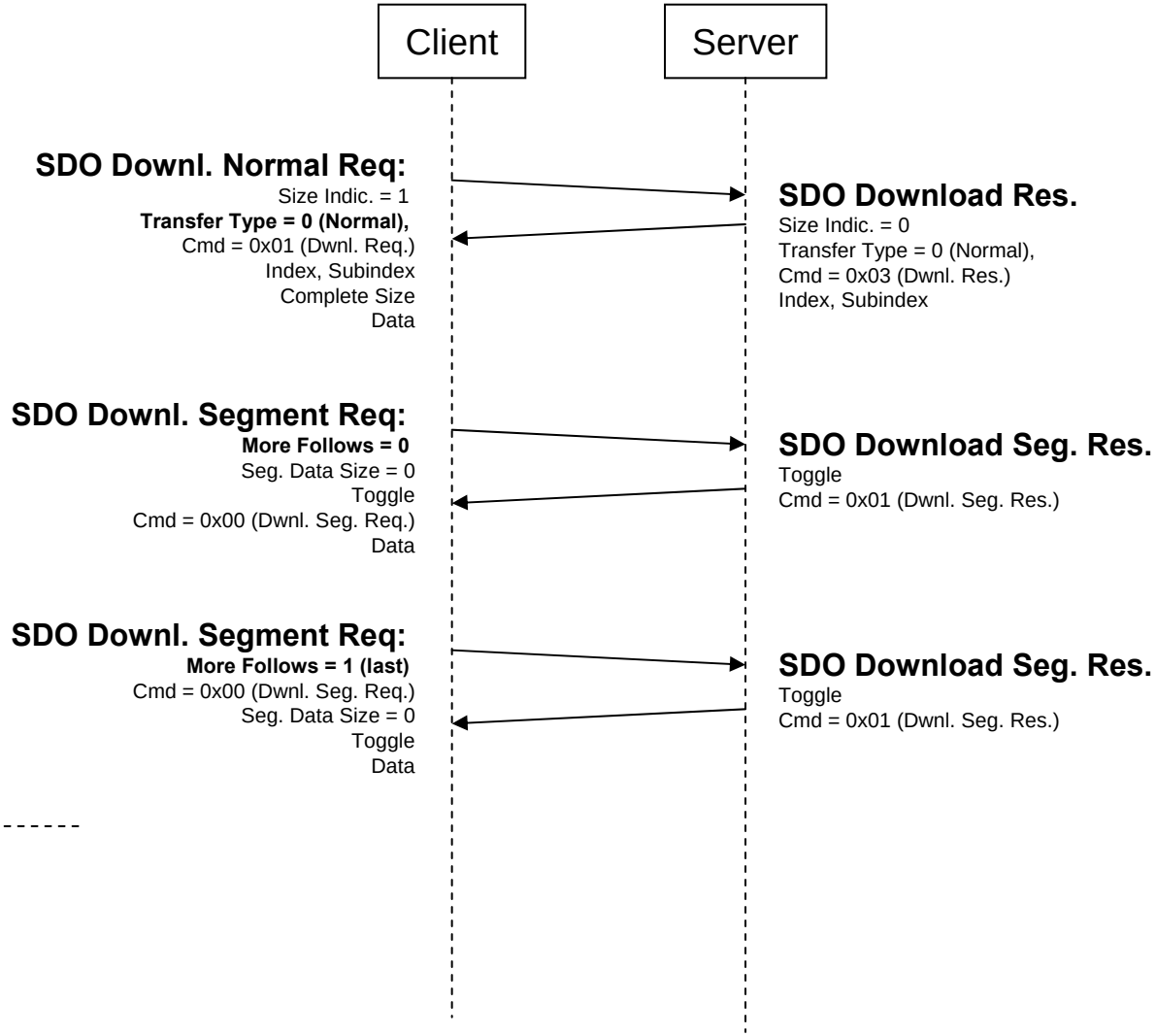

© EtherCAT Technology Group

Optional SDO Extensions to CANopen* DS 301

EtherCAT Basics
Slave Structure
Device Model (ISO/OSI)
Physical Layer
Data Link Layer
Frame Structure
Addressing
Commands
Memory/Registers
SyncManager
FMMU
Diagnosis
Distributed Clocks
Application Layer
State Machine
Mailbox
Mailbox Interface
EoE Ethernet
CoE CANopen
FoE File Access
SoE Servo Drive
ESI: Device Description
SII: Slave Information /IF
Device Profiles
Modular Devices
Drives
Configuration Tool
EtherCAT Master
Standards&Implementation

- Breaking of the 8 byte border
  - Full mailbox size usable
    → Block transfer unnecessary
  - 'Initiate SDO Download' request /
    'SDO Upload' response can contain data after SDO header
  - 'Download SDO Segment' request /
    'Upload SDO Segment' response can contain more than 7 bytes of data

- Downloading and Uploading all Subindices at once
  - Bit 4 of the Initiate 'SDO Download / Upload' request header indicates a 'Complete Access' to an Index
  - Sub Index field contains the start Subindex
    - 0: Complete Index with all Subindices
    - 1: Complete Index without Subindex 0

© EtherCAT Technology Group
* CANopen is a trademark of the CAN in Automation e.V.

CoE – Optional SDO Information Protocol

EtherCAT Basics
Slave Structure
Device Model (ISO/OSI)
Physical Layer
Data Link Layer
Frame Structure
Addressing
Commands
Memory/Registers
SyncManager
FMMU
Diagnosis
Distributed Clocks
Application Layer
State Machine
Mailbox
Mailbox Interface
EoE Ethernet
CoE CANopen
FoE File Access
SoE Servo Drive
ESI: Device Description
SII: Slave Information /IF
Device Profiles
Modular Devices
Drives
Configuration Tool
EtherCAT Master
Standards&Implementation

- Access to object lists
  - list of all supported object identifiers
  - list of all object identifiers that can be mapped in PDOs
  - list of all object identifiers that should be included in a backup
- Access to object descriptions
  - Descriptions of objects – as defined in DS 301
- Access to entry descriptions
  - Descriptions of object entries (sub index) – as defined in DS 301

© EtherCAT Technology Group

CoE – Object Dictionary

EtherCAT Basics
Slave Structure
Device Model (ISO/OSI)
Physical Layer
Data Link Layer
Frame Structure
Addressing
Commands
Memory/Registers
SyncManager
FMMU
Diagnosis
Distributed Clocks
Application Layer
State Machine
Mailbox
Mailbox Interface
EoE Ethernet
CoE CANopen
FoE File Access
SoE Servo Drive
ESI: Device Description
SII: Slave Information /IF
Device Profiles
Modular Devices
Drives
Configuration Tool
EtherCAT Master
Standards&Implementation

- Devices with an EtherCAT-CoE and a CANopen* interface are possible with the same object dictionary

Index Range	Meaning
0x0000 – 0x0FFF	Data Type Description
0x1000 – 0x1FFF	Communication objects • Device Type, Identity, PDO Mapping – like defined in DS 301 • Objects defined in DS 301 not needed are reserved for EtherCAT • Additional objects (Sync Manager Communication Type, Sync Manager PDO Assignment) located in unused areas of DS 301
0x2000 – 0x5FFF	Manufacturer specific
0x6000 – 0x9FFF	Profile specific
0xA000 – 0xFFFF	reserved

© EtherCAT Technology Group
* CANopen is a trademark of the CAN in Automation e.V.

CoE – Online Object Dictionary

Demo

EtherCAT Basics
Slave Structure
Device Model (ISO/OSI)
Physical Layer
Data Link Layer
- Frame Structure
- Addressing
- Commands
- Memory/Registers
- SyncManager
- FMMU
- Diagnosis

Distributed Clocks
Application Layer
- State Machine

Mailbox
- Mailbox Interface
- EoE Ethernet
- CoE CANopen
- FoE File Access
- SoE Servo Drive

ESI: Device Description
SII: Slave Information /IF
Device Profiles
- Modular Devices
- Drives

Configuration Tool
EtherCAT Master
Standards&Implementation

Allgemein | BK1120 | EtherCAT | Startup | CoE - Online | Online

Update List | Auto Update

Erweitert.. | All Objects

Index	Name	Flags	Wert
1018:02	Product Code	RO	0x04602C22 (73411618)
1018:03	Revision Number	RO	0x00000000 (0)
1018:04	Serial Number	RO	0x00000000 (0)
1600:0	RxPDO Mapping Box 001	RW	> 2 <
1600:01	Output Mapping Area 001	RW	0x7000:01, 8
1600:02	Output Mapping Area 002	RW	0x7000:02, 40
1602:0	RxPDO Mapping Box 003	RW	> 4 <
1603:0	RxPDO Mapping Box 004	RW	> 3 <
16FF:0		RW	> 1 <
1A00:0	TxPDO Mapping Box 001	RW	> 2 <
1A00:01	Input Mapping Area 001	RW	0x6000:01, 8
1A00:02	Input Mapping Area 002	RW	0x6000:02, 40
1A01:0	TxPDO Mapping Box 002	RW	> 4 <
1A03:0	TxPDO Mapping Box 004	RW	> 3 <
1AFF:0		RW	> 1 <
1C00:0	Sync Manager Type	RO	> 4 <
1C00:01	SubIndex 001	RO	0x01 (1)
1C00:02	SubIndex 002	RO	0x02 (2)
1C00:03	SubIndex 003	RO	0x03 (3)
1C00:04	SubIndex 004	RO	0x04 (4)
1C12:0	SM 002 RxPDO Assign	RW	> 4 <
1C12:01	SubIndex 001	RW	0x16FF (5887)
1C12:02	SubIndex 002	RW	0x1600 (5632)
1C12:03	SubIndex 003	RW	0x1603 (5635)
1C12:04	SubIndex 004	RW	0x1602 (5634)
1C13:0	SM 003 TxPDO Assign	RW	> 4 <
4000:0	Coupler Table 0 [LO]	RW	> 128 <
4001:0	Coupler Table 0 [HI]	RW	> 128 <
4012:0	Coupler Table 9 [LO]	RO	> 5 <

© EtherCAT Technology Group

CoE – New objects for EtherCAT

EtherCAT Basics
Slave Structure
Device Model (ISO/OSI)
Physical Layer
Data Link Layer
Frame Structure
Addressing
Commands
Memory/Registers
SyncManager
FMMU
Diagnosis
Distributed Clocks
Application Layer
State Machine
Mailbox
Mailbox Interface
EoE Ethernet
CoE CANopen
FoE File Access
SoE Servo Drive
ESI: Device Description
SII: Slave Information /IF
Device Profiles
Modular Devices
Drives
Configuration Tool
EtherCAT Master
Standards&Implementation

Index	Meaning
0x1C00	SyncManager Communication Type
0x1C10 – 0x1C2F	SyncManager PDO Assign
0x1C30 – 0x1C4F	SyncManager Parameter

- SyncManager Communication Type
  - Subindex (1-32) defines communication type of the corresponding Sync Manager channel
    - Mailbox Out (= 1 buffer write)
    - Mailbox In (= 1 buffer read)
    - Process Data Out (= 3 buffer write)
    - Process Data In (= 3 buffer read)
- SyncManager PDO Assign
  - Contains a list of assigned PDOs for each Sync Manager channel (Index of PDO mapping objects)
  - Assigned PDO in Subindex 1 to n describe the process data parts of the Sync Manager channel
- SyncManager Parameter
  - SubIdx 1: Synchronization type (Freerun, synchron, DC Sync0, DC Sync1, SyncSm0 .. SyncSm1F)
  - SubIdx 2: Cycle time
  - SubIdx 3: Shift time

© EtherCAT Technology Group

CoE – PDO Process Data mapping

EtherCAT Basics
Slave Structure
Device Model (ISO/OSI)
Physical Layer
Data Link Layer
Frame Structure
Addressing
Commands
Memory/Registers
SyncManager
FMMU
Diagnosis
Distributed Clocks
Application Layer
State Machine
Mailbox
Mailbox Interface
EoE Ethernet
CoE CANopen
FoE File Access
SoE Servo Drive
ESI: Device Description
SII: Slave Information /IF
Device Profiles
Modular Devices
Drives
Configuration Tool
EtherCAT Master
Standards&Implementation

- No mapping protocol implemented for very simple devices
  - Fixed process data
  - Readable via EEPROM – no SDO protocol necessary
- Readable PDO Mapping
  - Fixed process data mapping
  - Readable via SDO
- Selectable PDO Mapping
  - Multiple fixed PDO – selectable via CoE object (1C1xh)
  - Selectable via SDO (required)
- Variable PDO Mapping
  - Configurable via CoE or SoE required
  - Writable PDO content

© EtherCAT Technology Group

CoE – PDO Configuration

Demo

EtherCAT Basics
Slave Structure
Device Model (ISO/OSI)
Physical Layer
Data Link Layer
- Frame Structure
- Addressing
- Commands
- Memory/Registers
- SyncManager
- FMMU
- Diagnosis

Distributed Clocks
Application Layer
- State Machine

Mailbox
- Mailbox Interface
- EoE Ethernet
- CoE CANopen
- FoE File Access
- SoE Servo Drive

ESI: Device Description
SII: Slave Information /IF
Device Profiles
- Modular Devices
- Drives

Configuration Tool
EtherCAT Master
Standards&Implementation

General | EtherCAT | Process Data | Mailbox | DC | Startup | CoE - Online | Online

Sync Manager:

SM	Size	Type	Flags
0	246	MbxOut	
1	246	MbxIn	
2	3	Outputs	
3	5	Inputs	

PDO List:

Index	Size	SM	Name	Flags
0x1600	3.0	2	RxPDO 001 mapping	F
0x1610	4.0		RxPDO 017 mapping	F
0x1A00	5.0	3	TxPDO 001 mapping	F
0x1A10	6.0		TxPDO 017 mapping	F

PDO Assignment (0x1C12):

- [x] 0x1600
- [ ] 0x1610 (excluded by 0x1600)

PDO Content (0x1600):

Index	Size	Offs	Name	Type
0x3001:1	1.0	0.0	Control	USINT
0x3001:2	2.0	1.0	Data	UINT
		3.0		

Download
- [x] PDO Assignment
- [x] PDO Configuration

Load PDO info from device

© EtherCAT Technology Group

CoE – Emergency Message

EtherCAT Basics
Slave Structure
Device Model (ISO/OSI)
Physical Layer
Data Link Layer
- Frame Structure
- Addressing
- Commands
- Memory/Registers
- SyncManager
- FMMU
- Diagnosis

Distributed Clocks
Application Layer
- State Machine

Mailbox
- Mailbox Interface
- EoE Ethernet
- CoE CANopen
- FoE File Access
- SoE Servo Drive

ESI: Device Description
SII: Slave Information /IF
Device Profiles
- Modular Devices
- Drives

Configuration Tool
EtherCAT Master
Standards&Implementation

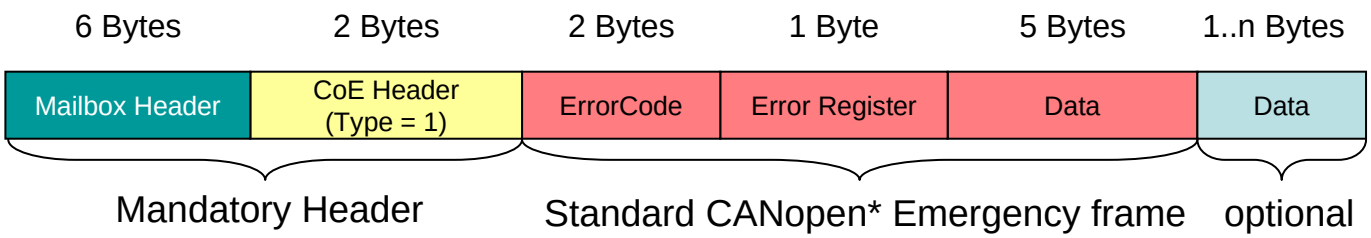

- Standard CANopen* Emergency frames can be used
- More than 5 bytes of data can be send optionally with one frame

- New: Diagnosis Object

© EtherCAT Technology Group
* CANopen is a trademark of the CAN in Automation e.V.

File Access over EtherCAT (FoE)

EtherCAT Basics
Slave Structure
Device Model (ISO/OSI)
Physical Layer
Data Link Layer
Frame Structure
Addressing
Commands
Memory/Registers
SyncManager
FMMU
Diagnosis
Distributed Clocks
Application Layer
State Machine
Mailbox
Mailbox Interface
EoE Ethernet
CoE CANopen
FoE File Access
SoE Servo Drive
ESI: Device Description
SII: Slave Information /IF
Device Profiles
Modular Devices
Drives
Configuration Tool
EtherCAT Master
Standards&Implementation

- Similar to TFTP (Trivial File Transfer Protocol, RFC 1350)
- Simple to implement – suitable for bootstrap loaders
- 6 Services are defined:
  - WRQ: Write request with “file name”
  - RRQ: Read request with “file name”
  - DATA: Data block (full mailbox size used)
  - ACK: Acknowledgment of DATA and WRQ requests
  - ERR: Error notification with predefined error codes
  - BUSY: Busy notification in case of longer procedures, extension to TFTP (e.g. erasing of flash modules)
- Special mailbox configuration for bootstrap mode possible
  - Fixed addresses and fixed size of the mailbox
  - Configuration defined by device (EEPROM)

© EtherCAT Technology Group

File Access over EtherCAT (WRQ, normal)

EtherCAT Basics
Slave Structure
Device Model (ISO/OSI)
Physical Layer
Data Link Layer
- Frame Structure
- Addressing
- Commands
- Memory/Registers
- SyncManager
- FMMU
- Diagnosis

Distributed Clocks
Application Layer
- State Machine

Mailbox
- Mailbox Interface
- EoE Ethernet
- CoE CANopen
- FoE File Access
- SoE Servo Drive

ESI: Device Description
SII: Slave Information /IF
Device Profiles
- Modular Devices
- Drives

Configuration Tool
EtherCAT Master
Standards&Implementation

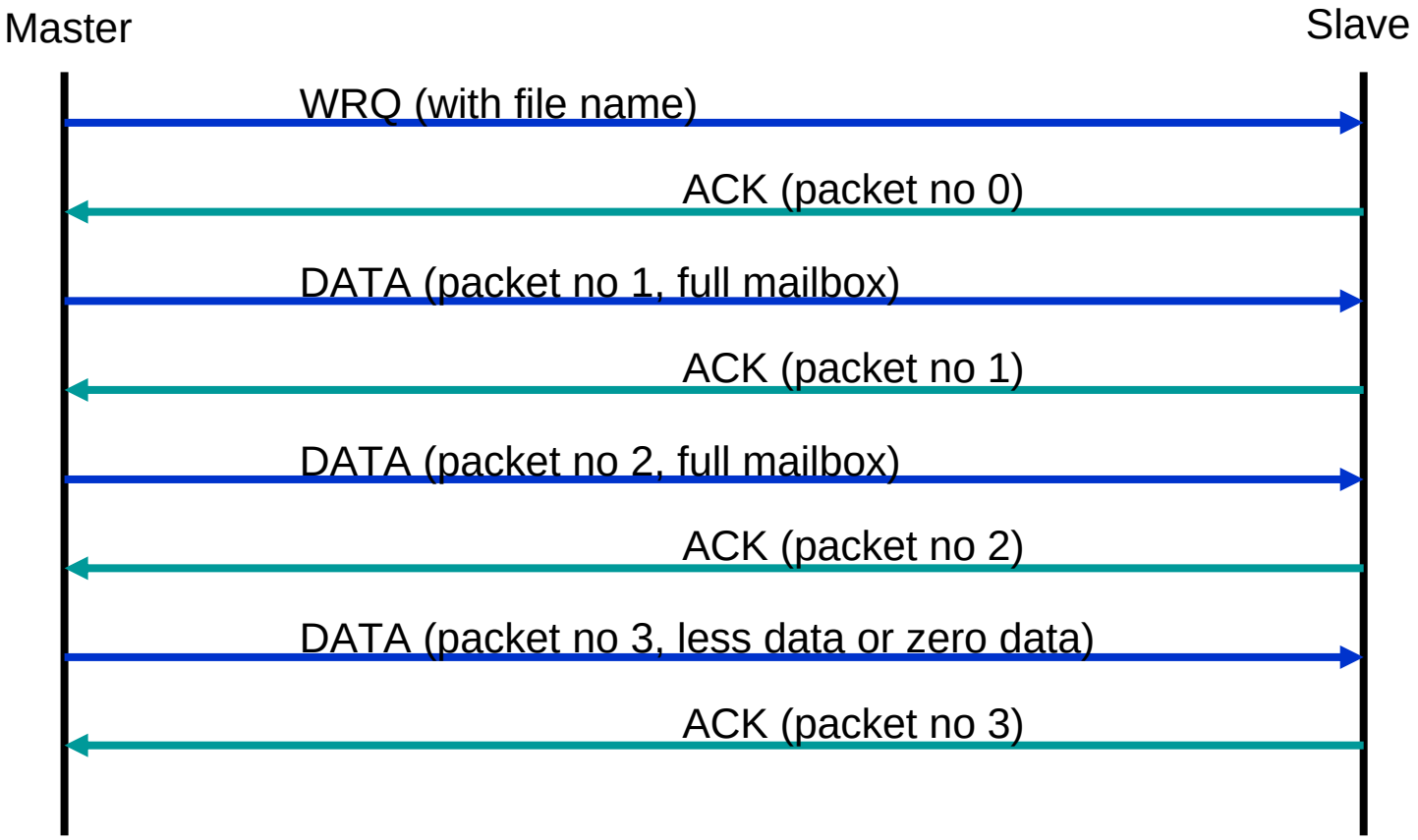

© EtherCAT Technology Group

File Access over EtherCAT (WRQ, with busy)

EtherCAT Basics
Slave Structure
Device Model (ISO/OSI)
Physical Layer
Data Link Layer
Frame Structure
Addressing
Commands
Memory/Registers
SyncManager
FMMU
Diagnosis
Distributed Clocks
Application Layer
State Machine
Mailbox
Mailbox Interface
EoE Ethernet
CoE CANopen
FoE File Access
SoE Servo Drive
ESI: Device Description
SII: Slave Information /IF
Device Profiles
Modular Devices
Drives
Configuration Tool
EtherCAT Master
Standards&Implementation

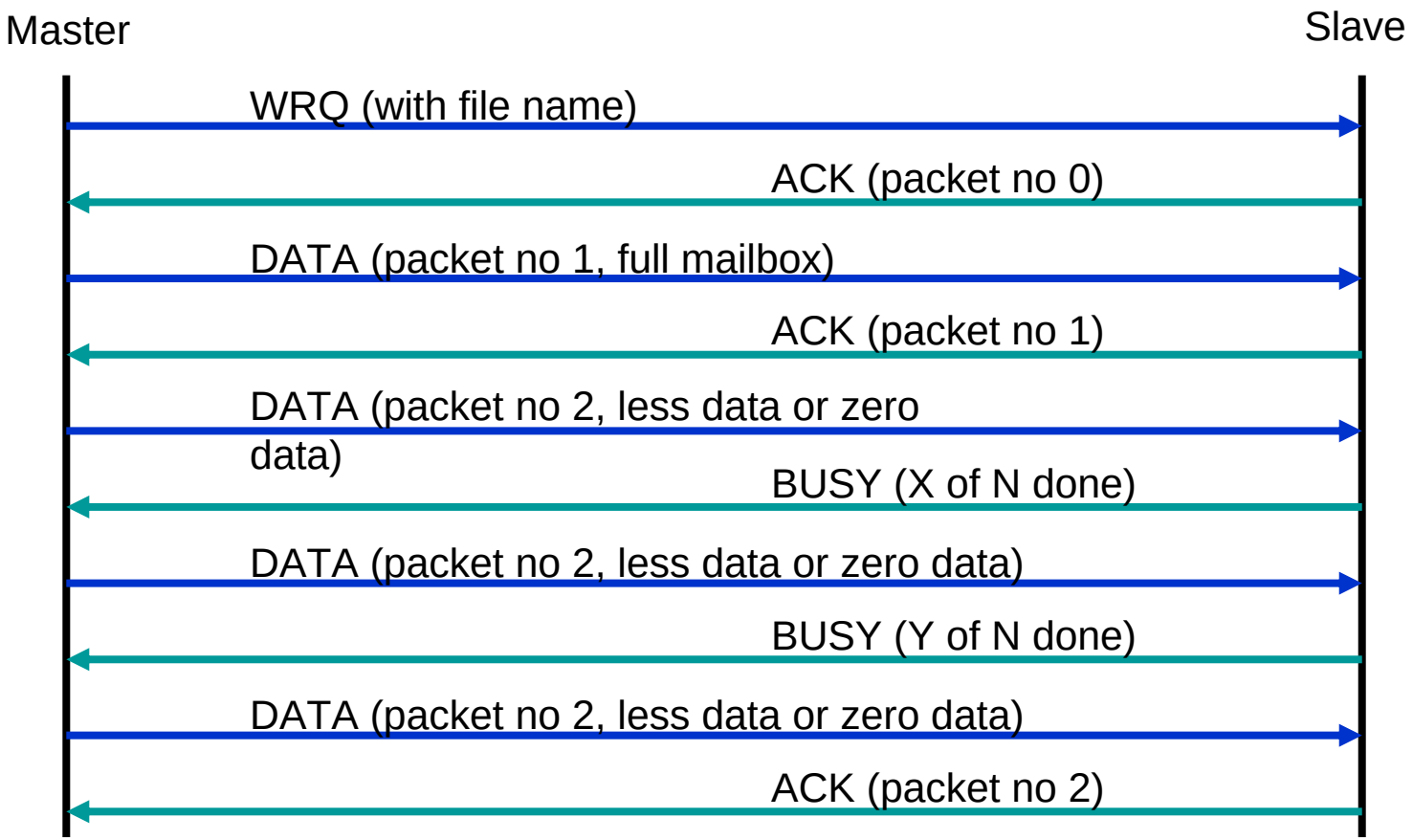

© EtherCAT Technology Group

File Access over EtherCAT (WRQ, with error)

EtherCAT Basics
Slave Structure
Device Model (ISO/OSI)
Physical Layer
Data Link Layer
Frame Structure
Addressing
Commands
Memory/Registers
SyncManager
FMMU
Diagnosis
Distributed Clocks
Application Layer
State Machine
Mailbox
Mailbox Interface
EoE Ethernet
CoE CANopen
FoE File Access
SoE Servo Drive
ESI: Device Description
SII: Slave Information /IF
Device Profiles
Modular Devices
Drives
Configuration Tool
EtherCAT Master
Standards&Implementation

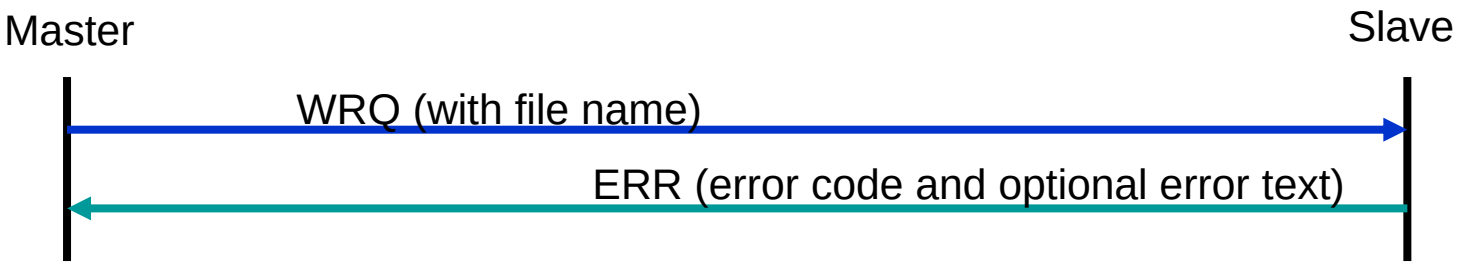

© EtherCAT Technology Group

File Access over EtherCAT (RRQ, normal)

EtherCAT Basics
Slave Structure
Device Model (ISO/OSI)
Physical Layer
Data Link Layer
Frame Structure
Addressing
Commands
Memory/Registers
SyncManager
FMMU
Diagnosis
Distributed Clocks
Application Layer
State Machine
Mailbox
Mailbox Interface
EoE Ethernet
CoE CANopen
FoE File Access
SoE Servo Drive
ESI: Device Description
SII: Slave Information /IF
Device Profiles
Modular Devices
Drives
Configuration Tool
EtherCAT Master
Standards&Implementation

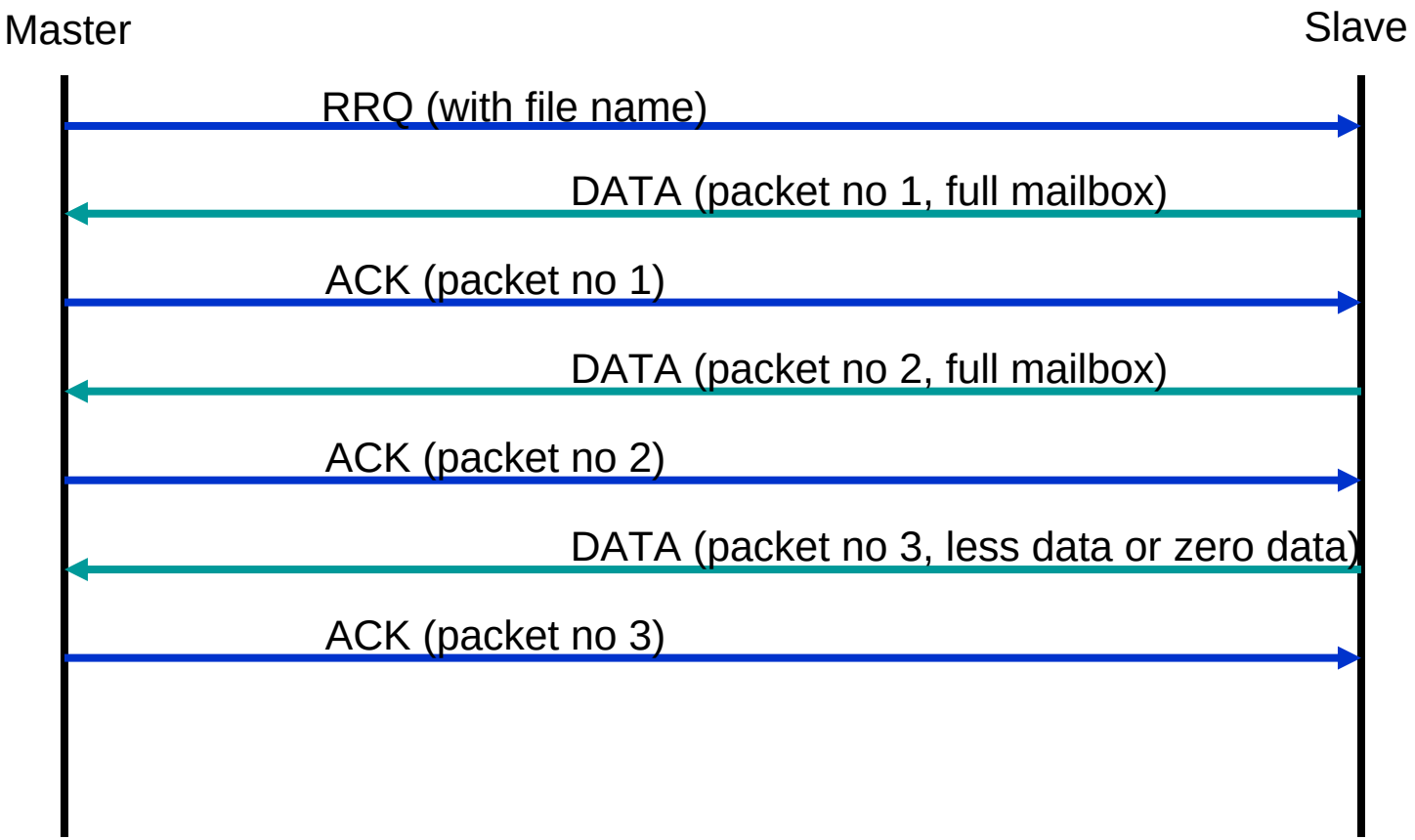

© EtherCAT Technology Group

Servo Drive over EtherCAT (SoE)

EtherCAT Basics
Slave Structure
Device Model (ISO/OSI)
Physical Layer
Data Link Layer
Frame Structure
Addressing
Commands
Memory/Registers
SyncManager
FMMU
Diagnosis
Distributed Clocks
Application Layer
State Machine
Mailbox
Mailbox Interface
EoE Ethernet
CoE CANopen
FoE File Access
SoE Servo Drive
ESI: Device Description
SII: Slave Information /IF
Device Profiles
Modular Devices
Drives
Configuration Tool
EtherCAT Master
Standards&Implementation

- Implements Service Channel
  - Read / Write to several elements of an IDN (Ident number)
  - Support of Procedure Commands
  - Slave Info

- The mapping of the IEC 61800-7-1 Annex D (SERCOS™) on EtherCAT is described in IEC 61800-7-3 Annex D

© EtherCAT Technology Group

SoE – Frame Header

EtherCAT Basics
Slave Structure
Device Model (ISO/OSI)
Physical Layer
Data Link Layer
- Frame Structure
- Addressing
- Commands
- Memory/Registers
- SyncManager
- FMMU
- Diagnosis

Distributed Clocks
Application Layer
- State Machine

Mailbox
- Mailbox Interface
- EoE Ethernet
- CoE CANopen
- FoE File Access
- SoE Servo Drive

ESI: Device Description
SII: Slave Information /IF
Device Profiles
- Modular Devices
- Drives

Configuration Tool
EtherCAT Master
Standards&Implementation

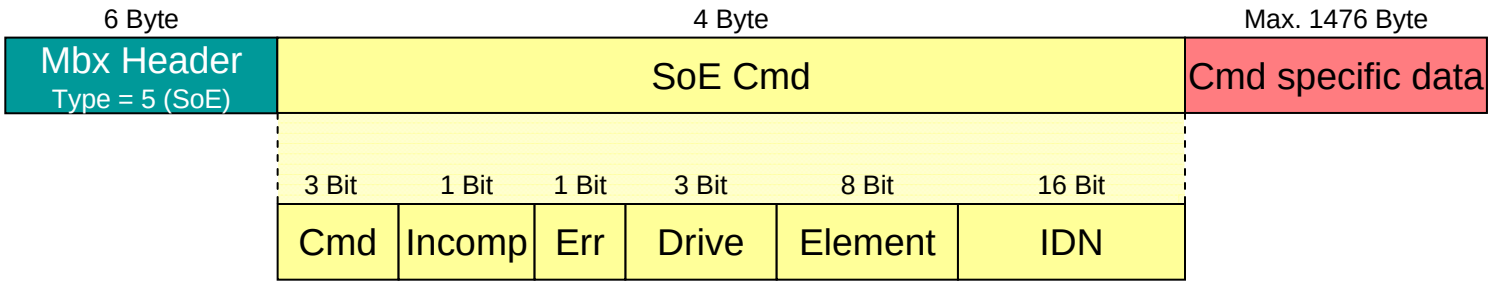

Command	**Command Type** **Read Request, Read Response, Write Request, Write Response, Notification, SlaveInfo**
Incomplete	**Indicates if execution of another service is needed to complete the operation**
Error	**Indicates if an Error has occurred**
Drive	**Contains the address of the drive inside the slave device that is addressed**
Element	**Contains the ElementFlags. There is a single Flag for each element of an IDN indicating which elements of the object addressed by the IDN are accessed**
IDN	**contains IDN according to IEC 61800-7-2 Annex D** **or an indicator for fragments left in case of segmented service**

© EtherCAT Technology Group

SoE Communication phases

EtherCAT Basics
Slave Structure
Device Model (ISO/OSI)
Physical Layer
Data Link Layer
Frame Structure
Addressing
Commands
Memory/Registers
SyncManager
FMMU
Diagnosis
Distributed Clocks
Application Layer
State Machine
Mailbox
Mailbox Interface
EoE Ethernet
CoE CANopen
FoE File Access
SoE Servo Drive
ESI: Device Description
SII: Slave Information /IF
Device Profiles
Modular Devices
Drives
Configuration Tool
EtherCAT Master
Standards&Implementation

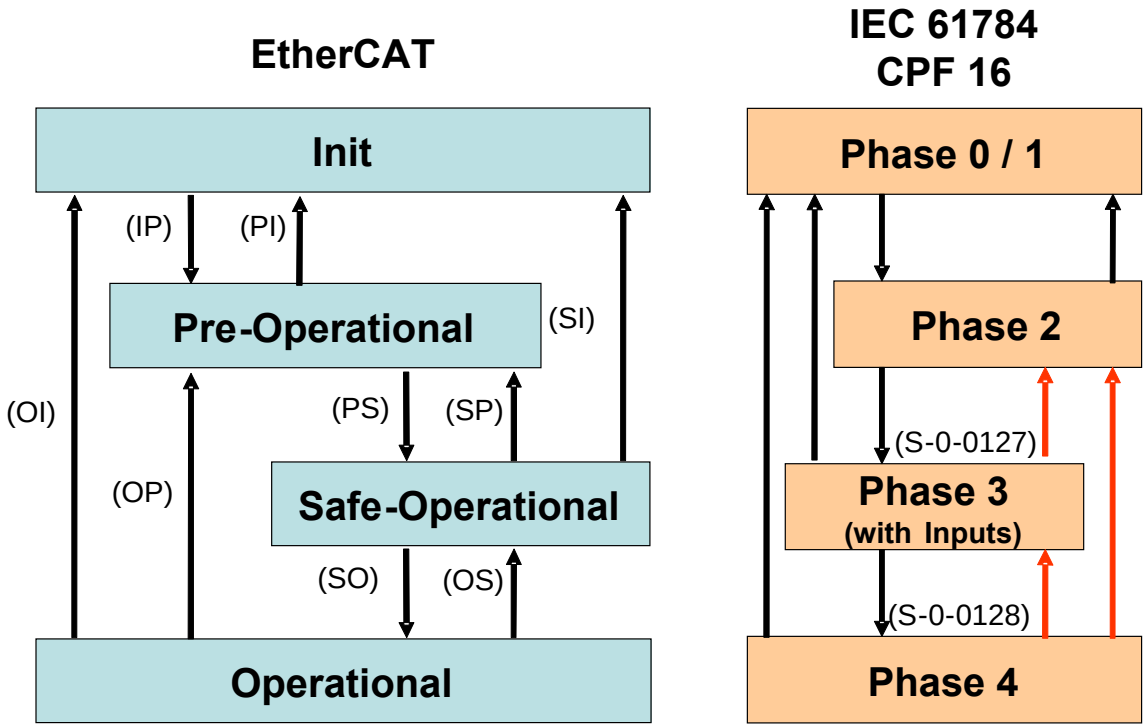

- SERCOS communication phases (CPs) comparable to EtherCAT state machine
- Phases 0 and 1 covered by the ‘Init’
- Phase 2 corresponds to ‘Pre-Operational’
  - allows access to the IDNs via ‘service channel’ (SoE).
- Phase 3 mapped to ‘Safe-Operational’
  - slave shall transmit valid inputs, ignore outputs from the master.
- ‘Operational’ corresponds to phase 4
  - all inputs and outputs are valid.

© EtherCAT Technology Group

Obsolete IDN

EtherCAT Basics
Slave Structure
Device Model (ISO/OSI)
Physical Layer
Data Link Layer
Frame Structure
Addressing
Commands
Memory/Registers
SyncManager
FMMU
Diagnosis
Distributed Clocks
Application Layer
State Machine
Mailbox
Mailbox Interface
EoE Ethernet
CoE CANopen
FoE File Access
SoE Servo Drive
ESI: Device Description
SII: Slave Information /IF
Device Profiles
Modular Devices
Drives
Configuration Tool
EtherCAT Master
Standards&Implementation

IDN	Description
S-0-0003	Minimum AT transmit starting time (T1min)
S-0-0004	Transmit/receive transition time (TATMT)
S-0-0005	Minimum feedback acquisition time (T4min)
S-0-0009	Beginning address in master data telegram (MDT POS)
S-0-0010	Length of master data telegram (MDT LEN)
S-0-0088	Receive to receive recovery time (TMTSG)
S-0-0090	Command value transmit time (TMTSG)
S-0-0127	C100 Communication phase 3 transition check Functionality done in EtherCAT transition from ‘Pre-Operational’ to ‘Safe-Operational’. If the transition fails, the reason for this failure can be evaluated via S-0-0021.
S-0-0128	C200 Communication phase 4 transition check Functionality done in EtherCAT transition from ‘Safe-Operational’ to ‘Operational’. If the transition fails, the reason for this failure can be evaluated via S-0-0022.

© EtherCAT Technology Group

Changed IDN

EtherCAT Basics
Slave Structure
Device Model (ISO/OSI)
Physical Layer
Data Link Layer
Frame Structure
Addressing
Commands
Memory/Registers
SyncManager
FMMU
Diagnosis
Distributed Clocks
Application Layer
State Machine
Mailbox
Mailbox Interface
EoE Ethernet
CoE CANopen
FoE File Access
SoE Servo Drive
ESI: Device Description
SII: Slave Information /IF
Device Profiles
Modular Devices
Drives
Configuration Tool
EtherCAT Master
Standards&Implementation

IDN	Meaning with SoE
S-0-0006	AT Transmission starting time (T1) T1 specifies the time offset from the EtherCAT sync signal to the time until the application shall provide new AT data inside the EtherCAT slave controller memory.
S-0-0014	Interface status This parameter should reflect DL status, AL status and AL status code of EtherCAT
S-0-0028	MST error counter MST error counter indicates missing Datagrams for cyclic data transfers This parameter should reflect RX-error counter and Lost-link counter of EtherCAT
S-0-0089	MDT Transmit starting time (T2) T2 specifies the time offset from the EtherCAT sync signal to the time until new MDT data are available inside the EtherCAT slave controller memory.

© EtherCAT Technology Group

Synchronization Mapping

EtherCAT Basics
Slave Structure
Device Model (ISO/OSI)
Physical Layer
Data Link Layer
Frame Structure
Addressing
Commands
Memory/Registers
SyncManager
FMMU
Diagnosis
Distributed Clocks
Application Layer
State Machine
Mailbox
Mailbox Interface
EoE Ethernet
CoE CANopen
FoE File Access
SoE Servo Drive
ESI: Device Description
SII: Slave Information /IF
Device Profiles
Modular Devices
Drives
Configuration Tool
EtherCAT Master
Standards&Implementation

- CPF16 Phase 0-2
- No synchronisation between master and slave.
- Service channel communication via EtherCAT mailbox.

- CPF16 Phase 3-4
- Synchronisation via ‘Distributed Clock’ (DC) or by Sync Manager event.
- Master configures the DC unit to generate a sync event.
- The sync event is set typically at the end of communication (Sync Manager event operates in the same way).
- The sync signal compares to the end of MST telegram as defined in SERCOS part of IEC 61158-6.

© EtherCAT Technology Group

Process Data Mapping

EtherCAT Basics
Slave Structure
Device Model (ISO/OSI)
Physical Layer
Data Link Layer
Frame Structure
Addressing
Commands
Memory/Registers
SyncManager
FMMU
Diagnosis
Distributed Clocks
Application Layer
State Machine
Mailbox
Mailbox Interface
EoE Ethernet
CoE CANopen
FoE File Access
SoE Servo Drive
ESI: Device Description
SII: Slave Information /IF
Device Profiles
Modular Devices
Drives
Configuration Tool
EtherCAT Master
Standards&Implementation

- Sync Manager 2 for Output Data
  buffered mode, contains MDT data
- Sync Manager 3 for Input Data
  mailbox mode, contains AT data

- MDT, AT configured via S-0-0015, S-0-0016 and S-0-0024.
- Process data consists of drive control/status word followed by S-0-0015, S-0-0016, S-0-0024 defined values.
- Service channel data not included in process data.

© EtherCAT Technology Group

Service Channel

EtherCAT Basics
Slave Structure
Device Model (ISO/OSI)
Physical Layer
Data Link Layer
Frame Structure
Addressing
Commands
Memory/Registers
SyncManager
FMMU
Diagnosis
Distributed Clocks
Application Layer
State Machine
Mailbox
Mailbox Interface
EoE Ethernet
CoE CANopen
FoE File Access
SoE Servo Drive
ESI: Device Description
SII: Slave Information /IF
Device Profiles
Modular Devices
Drives
Configuration Tool
EtherCAT Master
Standards&Implementation

- SoE Service Channel (SSC) equivalent to SERCOS Service Channel (SVC) for non-cyclic data exchange.
- Implemented as mailbox with the SoE protocol type allows to access IDNs and their elements.
- Transfer of multiple elements of an IDN is possible.
- SSC uses
  - confirmed services (Write, Read, Procedure Command) - initiated by the Master (Client),
  - unconfirmed services (Abort SSC Command Execution, Write SSC Fragment - initiated by the Master
  - unconfirmed services (Read SSC Fragment, Notify SSC Command Execution, SSC Slave Info) - initiated by the Slave (server).

© EtherCAT Technology Group

EtherCAT Slave Information (ESI) Device Description Overview

Demo

EtherCAT Basics
Slave Structure
Device Model (ISO/OSI)
Physical Layer
Data Link Layer
Frame Structure
Addressing
Commands
Memory/Registers
SyncManager
FMMU
Diagnosis
Distributed Clocks
Application Layer
State Machine
Mailbox
Mailbox Interface
EoE Ethernet
CoE CANopen
FoE File Access
SoE Servo Drive
ESI: Device Description
SII: Slave Information /IF
Device Profiles
Modular Devices
Drives
Configuration Tool
EtherCAT Master
Standards&Implementation

- Device Description File in XML format
- One file suitable for a set of devices (from one Vendor)

- File contains information about:
  - Vendor
    - Vendor ID, Name, Logo, …
  - Device groups
    - Organization units to help configuration tools
  - Device
    - Device Identity, Name, PDI type
  - PDO Mapping
  - FMMU / SyncManager
    - number and usage

- Schema is defined in “EtherCATInfo.xsd”
- Can be viewed with Browser, Text Editor or XML Editors

© EtherCAT Technology Group

General Structure

EtherCAT Basics
Slave Structure
Device Model (ISO/OSI)
Physical Layer
Data Link Layer
- Frame Structure
- Addressing
- Commands
- Memory/Registers
- SyncManager
- FMMU
- Diagnosis

Distributed Clocks
Application Layer
- State Machine

Mailbox
- Mailbox Interface
- EoE Ethernet
- CoE CANopen
- FoE File Access
- SoE Servo Drive

ESI: Device Description
SII: Slave Information /IF
Device Profiles
- Modular Devices
- Drives

Configuration Tool
EtherCAT Master
Standards&Implementation

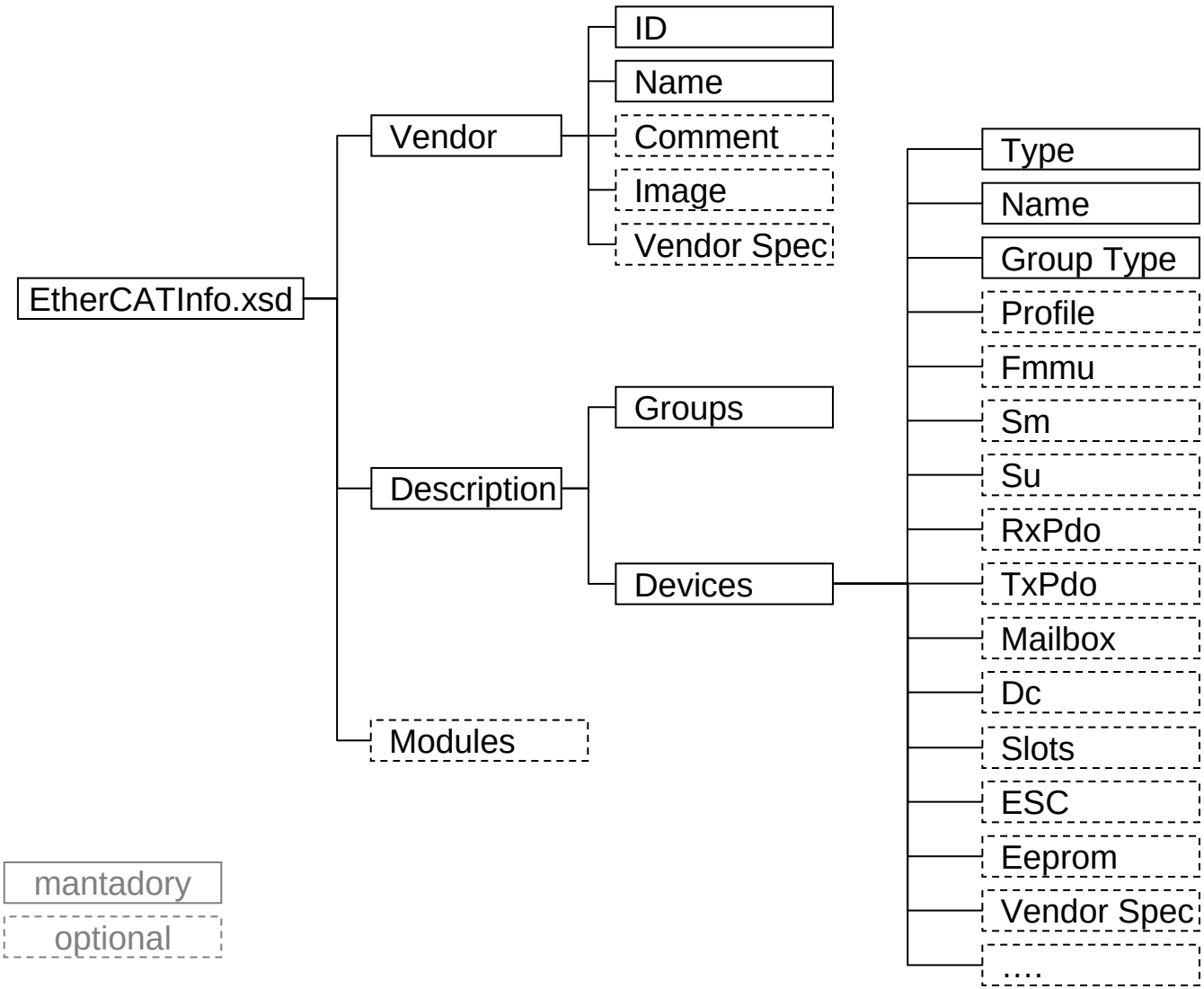

© EtherCAT Technology Group

Attributes *Vendor, Groups, Devices*

EtherCAT Basics
Slave Structure
Device Model (ISO/OSI)
Physical Layer
Data Link Layer
Frame Structure
Addressing
Commands
Memory/Registers
SyncManager
FMMU
Diagnosis
Distributed Clocks
Application Layer
State Machine
Mailbox
Mailbox Interface
EoE Ethernet
CoE CANopen
FoE File Access
SoE Servo Drive
ESI: Device Description
SII: Slave Information /IF
Device Profiles
Modular Devices
Drives
Configuration Tool
EtherCAT Master
Standards&Implementation

- Vendor
  - vendor ID, vendor name
  - Bitmap image and information text
- Groups
  - Device groups help configuration tool to sort the devices.
  - Configuration tool may use three levels to sort devices: vendor, group and device.
  - At least one device group must be provided, each device is assigned to one group
- Devices
  - Device description shall contain Type, Name and Group Type
  - FMMU, SM, PDO, Mailbox and Eeprom are recommended

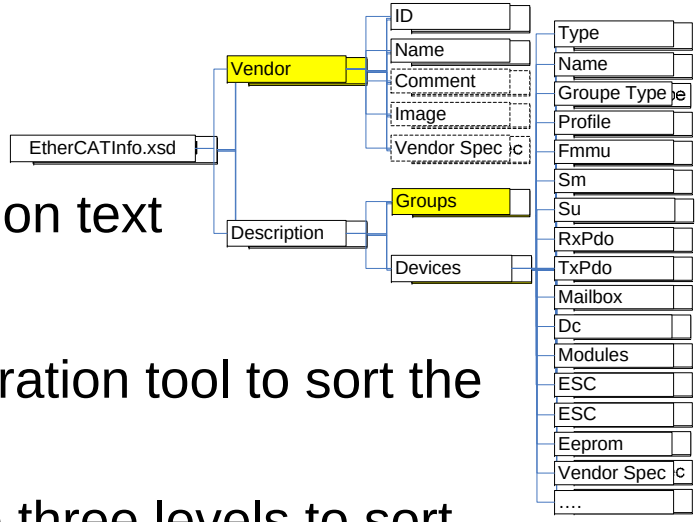

© EtherCAT Technology Group

Attributes *Profile*

EtherCAT Basics
Slave Structure
Device Model (ISO/OSI)
Physical Layer
Data Link Layer
Frame Structure
Addressing
Commands
Memory/Registers
SyncManager
FMMU
Diagnosis
Distributed Clocks
Application Layer
State Machine
Mailbox
Mailbox Interface
EoE Ethernet
CoE CANopen
FoE File Access
SoE Servo Drive
ESI: Device Description
SII: Slave Information /IF
Device Profiles
Modular Devices
Drives
Configuration Tool
EtherCAT Master
Standards&Implementation

- Profile
  - Profile Information
  - Object Dictionary
  - Same Structure for CoE and SoE Dictionaries

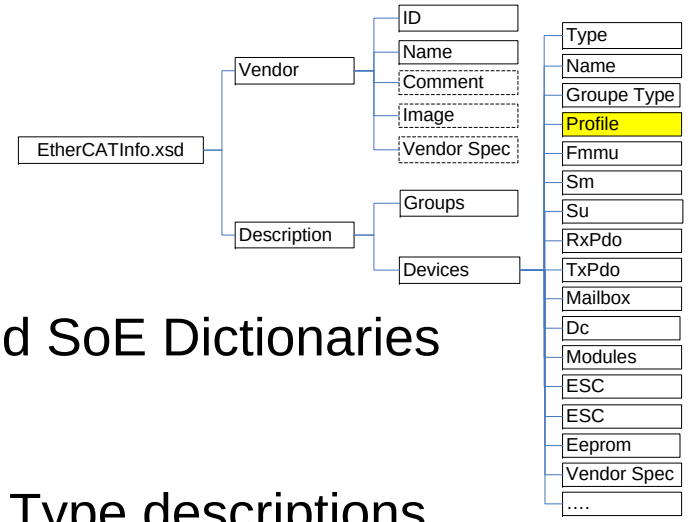

- Separation of Object and Data Type descriptions
  - Flat list of Objects
  - All Objects derived from a Data Type
  - ARRAY, RECORD (CoE) and Variable Data (SoE) defined as Data Types
  - Data Type describes the complete data of an object exactly as for a “Complete Access” download or upload

© EtherCAT Technology Group

Data Types and Objects

EtherCAT Basics
Slave Structure
Device Model (ISO/OSI)
Physical Layer
Data Link Layer
- Frame Structure
- Addressing
- Commands
- Memory/Registers
- SyncManager
- FMMU
- Diagnosis

Distributed Clocks
Application Layer
- State Machine

Mailbox
- Mailbox Interface
- EoE Ethernet
- CoE CANopen
- FoE File Access
- SoE Servo Drive

ESI: Device Description
SII: Slave Information /IF
Device Profiles
- Modular Devices
- Drives

Configuration Tool
EtherCAT Master
Standards&Implementation

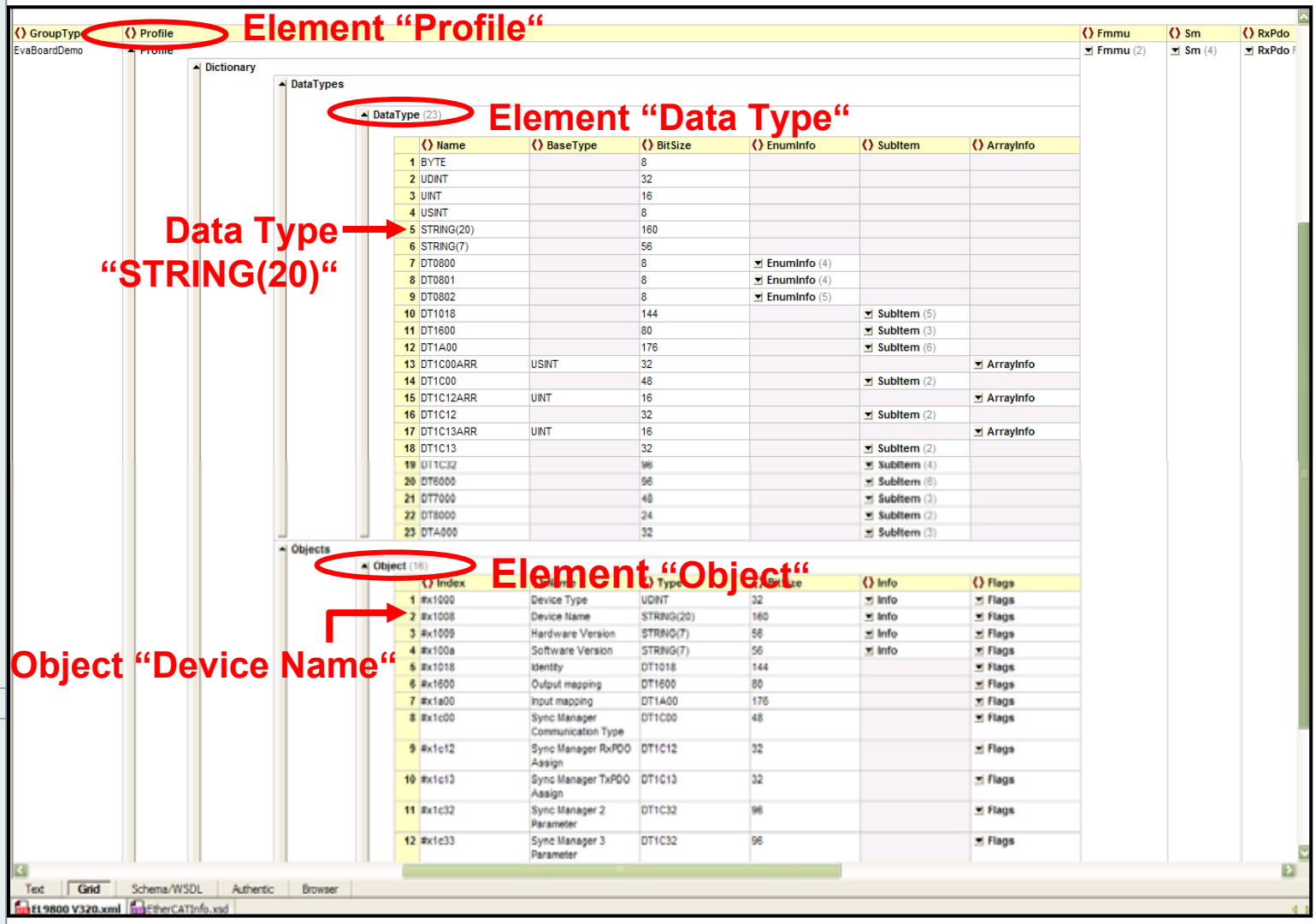

© EtherCAT Technology Group

Extended Device Description

EtherCAT Basics
Slave Structure
Device Model (ISO/OSI)
Physical Layer
Data Link Layer
Frame Structure
Addressing
Commands
Memory/Registers
SyncManager
FMMU
Diagnosis
Distributed Clocks
Application Layer
State Machine
Mailbox
Mailbox Interface
EoE Ethernet
CoE CANopen
FoE File Access
SoE Servo Drive
ESI: Device Description
SII: Slave Information /IF
Device Profiles
Modular Devices
Drives
Configuration Tool
EtherCAT Master
Standards&Implementation

- EtherCAT Device Description contains information about the vendor and the functionality of a device
  - This XML-Description can be used by EtherCAT Configurators to configure the device and the network
  - Specification is fixed in an XSD-Schema

- Defined Extensions
  - Support of Modular Devices
    - Module-Descriptions are selectable in the EtherCAT Configurator
    - Slot-Descriptions for PDO Numbers and Object Indexes depend on module position
  - OP-Modes
    - Predefined Operation Modes
    - How to configure the synchronization modes
  - Supporting Safety-Device-Description
  - Multi language support

© EtherCAT Technology Group

Extended Device Description

EtherCAT Basics
Slave Structure
Device Model (ISO/OSI)
Physical Layer
Data Link Layer
- Frame Structure
- Addressing
- Commands
- Memory/Registers
- SyncManager
- FMMU
- Diagnosis

Distributed Clocks
Application Layer
- State Machine

Mailbox
- Mailbox Interface
- EoE Ethernet
- CoE CANopen
- FoE File Access
- SoE Servo Drive

ESI: Device Description
SII: Slave Information /IF
Device Profiles
- Modular Devices
- Drives

Configuration Tool
EtherCAT Master
Standards&Implementation

- Module definition
  - With RxPDO/TxPDO and profile information (Object dictionary)

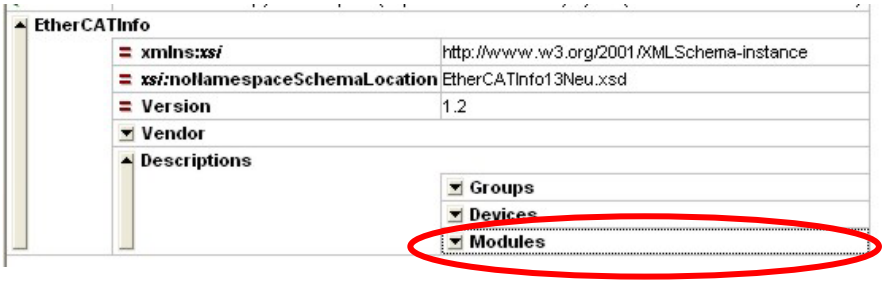

- Slots describe the allowed combination of the modules
  - Adaption of PDO Numbers and Object Indexes depend on module position

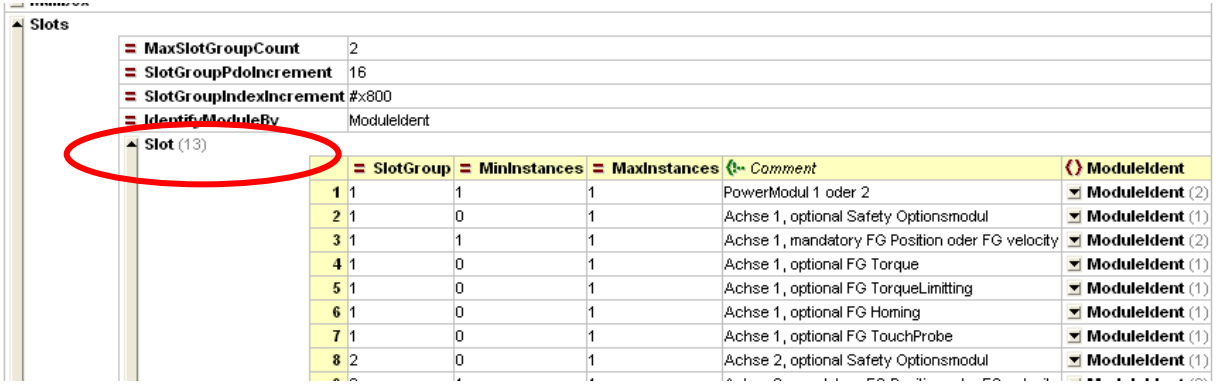

© EtherCAT Technology Group

Modules

Element (Attribute)	Description
(CRC32)	Checksum of the Modules description
Type (ModuleIdent)	(M): Identifies the module - (O): can be downloaded as expected module ident list (objects 0xF03y) - (O): can be uploaded as real module ident list (objects 0xF05y)
Type (ModuleClass)	(O): used to group modules
Type (ModulePdoGroup)	(O): used to define the PDO assign rule
Name	(M): Name of the module
RxPDO	(O): RxPDO(s) of the module - PDO Number of the PDO might be adapted - Index of the PDO entries might be adapted
TxPDO	(O): TxPDO(s) of the module - PDO Number of the PDO might be adapted - Index of the PDO entries might be adapted
SafetyParaMapping	(O): used only for FSoE modules
Mailbox	(O): used to define init commands - Index of the entries might be adapted
Profile	(O): used to define the object dictionary - Index of the entries might be adapted
Image	(O): Images of the module

© EtherCAT Technology Group

Slots and Slot Groups

EtherCAT Basics
Slave Structure
Device Model (ISO/OSI)
Physical Layer
Data Link Layer
Frame Structure
Addressing
Commands
Memory/Registers
SyncManager
FMMU
Diagnosis
Distributed Clocks
Application Layer
State Machine
Mailbox
Mailbox Interface
EoE Ethernet
CoE CANopen
FoE File Access
SoE Servo Drive
ESI: Device Description
SII: Slave Information /IF
Device Profiles
Modular Devices
Drives
Configuration Tool
EtherCAT Master
Standards&Implementation

- The connectable modules are described as Slots
- One Module is related to one Slot
- One Slot Group contains several Slots
- Adapting of Index and PDO-Number
  - Unchanged
  - With every slot (module)
  - With every slot group

© EtherCAT Technology Group

Slot

Element (Attribute)	Description
(MaxSlotCount)	maximum number of modules (slots) connectable
(SlotPdoIncrement)	defines the increment (multiplied with the slot‘s (module‘s) position) of the PDO number
(SlotIndexincrement)	defines the increment (multiplied with the slot‘s (module‘s) position) of the Index
(MaxSlotGroupCount)	maximum number of slot groups connectable
(SlotGroupPdoIncrement)	defines the increment (multiplied with the slot group‘s position) of the PDO number
(SlotGroupIndexincrement)	defines the increment (multiplied with the slot group‘s position) of the Index
Slot	List of slots (Definition of the slot see next slide)
ModulePdoGroup	One element for each Module PDO Group
ModulePdoGroup (Alignment)	Defines the alignment after the Module PDO Group
ModulePdoGroup (PdoNo)	Defines the PDO Number containing the mapping information of the align

© EtherCAT Technology Group

Slot

- The Slot Definition contains a list of modules connectable to this slot
- The allowed order of the modules is described with the order of the slot definitions
- Mandatory modules to be connected can be described with MinInstances=MaxInstances=1

Element (Attribute)	Description
(SlotGroup)	Slot Group of the module
(MinInstances)	Minimum number of instances of the slot
(MaxInstances)	Maximum number of instances of the slot
(SlotGroupIndexIncrement)	defines the increment (multiplied with the slot group's position) of the Index. If defined, it overwrites SlotGroupIndexIncrement of the Slots definition.
ModuleIdent	List of modules (identified by ModuleIdent) which is connectable to the slot
ModuleClass	List of modules (identified by ModuleClass) which is connectable to the slot

© EtherCAT Technology Group

XML and EEPROM

EtherCAT Basics
Slave Structure
Device Model (ISO/OSI)
Physical Layer
Data Link Layer
Frame Structure
Addressing
Commands
Memory/Registers
SyncManager
FMMU
Diagnosis
Distributed Clocks
Application Layer
State Machine
Mailbox
Mailbox Interface
EoE Ethernet
CoE CANopen
FoE File Access
SoE Servo Drive
ESI: Device Description
SII: Slave Information /IF
Device Profiles
Modular Devices
Drives
Configuration Tool
EtherCAT Master
Standards&Implementation

Configuration Tool generates binary file from device description to update EEPROM on slave

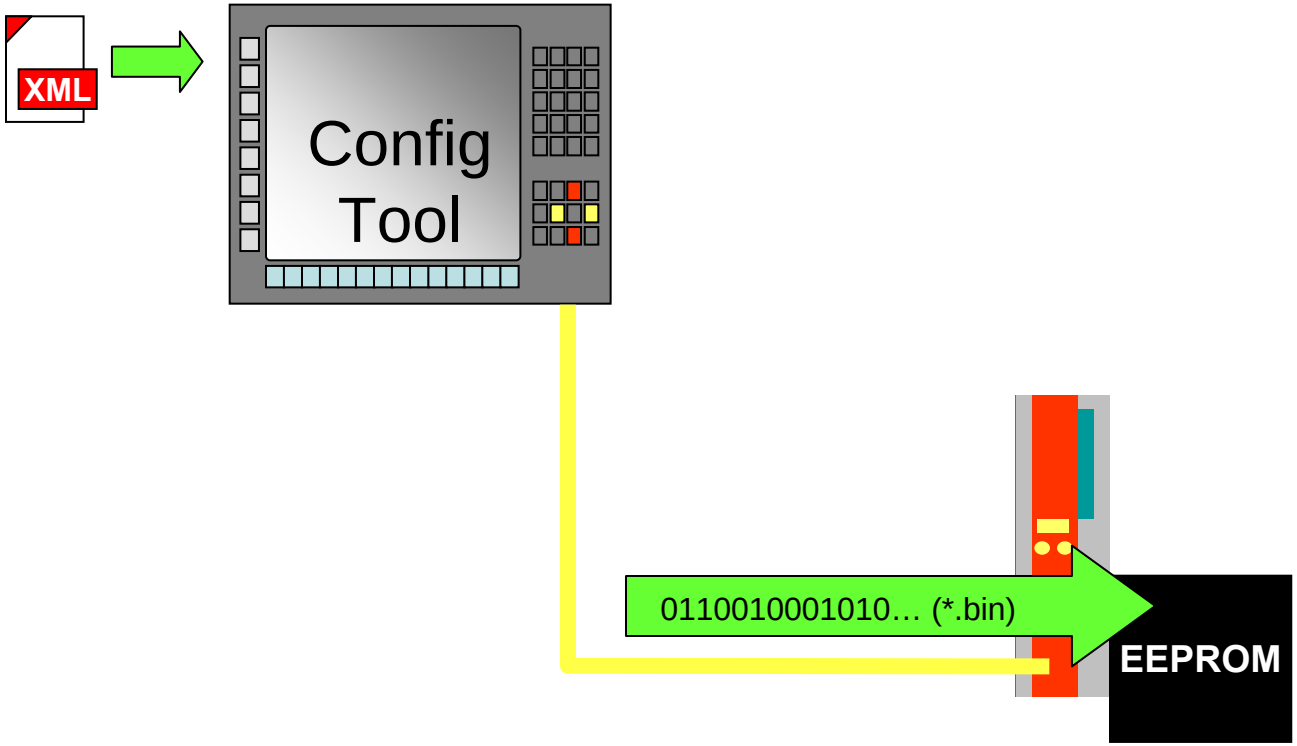

© EtherCAT Technology Group

Slave Information Interface (SII)

EtherCAT Basics
Slave Structure
Device Model (ISO/OSI)
Physical Layer
Data Link Layer
- Frame Structure
- Addressing
- Commands
- Memory/Registers
- SyncManager
- FMMU
- Diagnosis

Distributed Clocks
Application Layer
- State Machine

Mailbox
- Mailbox Interface
- EoE Ethernet
- CoE CANopen
- FoE File Access
- SoE Servo Drive

ESI: Device Description
SII: Slave Information /IF
Device Profiles
- Modular Devices
- Drives

Configuration Tool
EtherCAT Master
Standards&Implementation

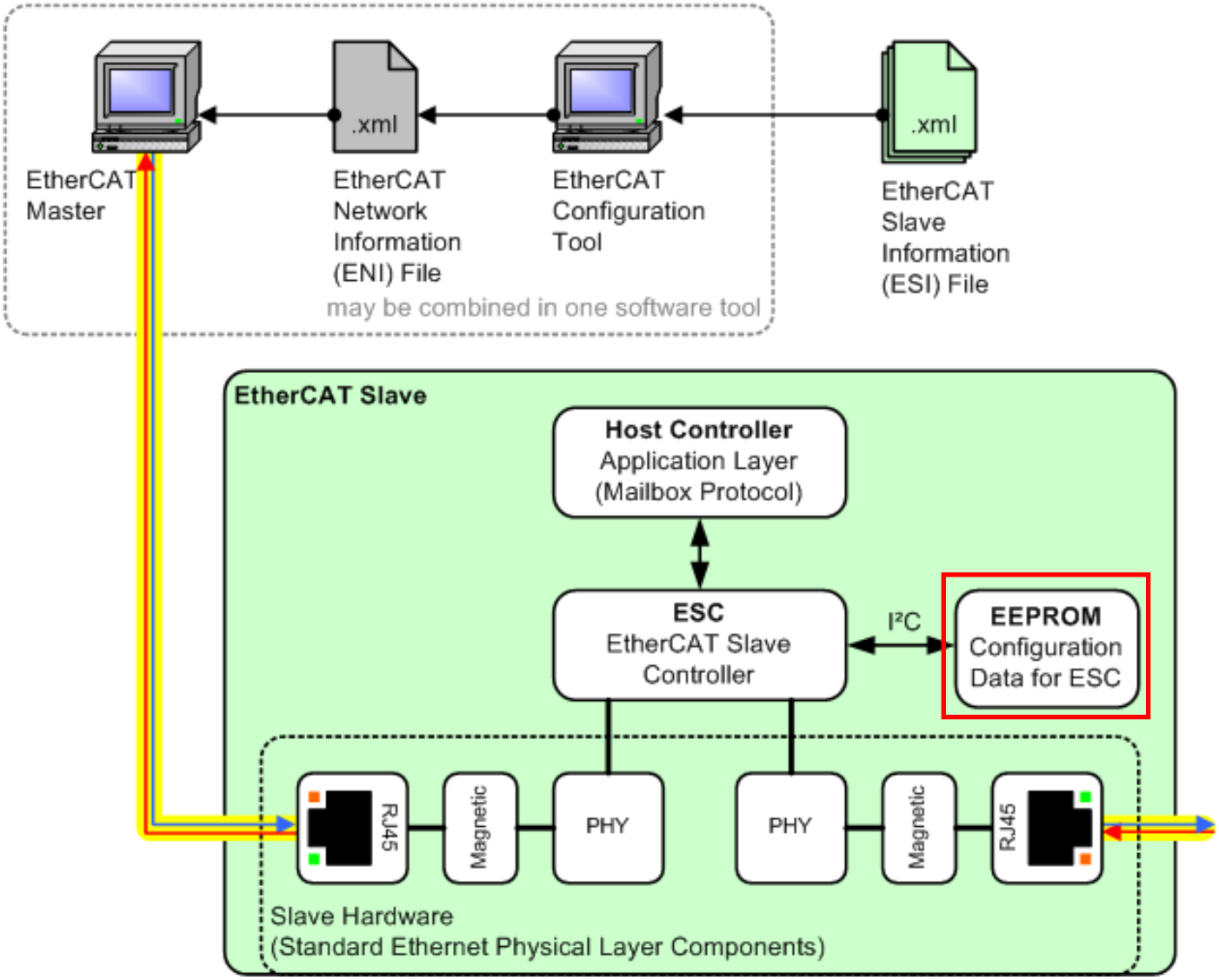

© EtherCAT Technology Group

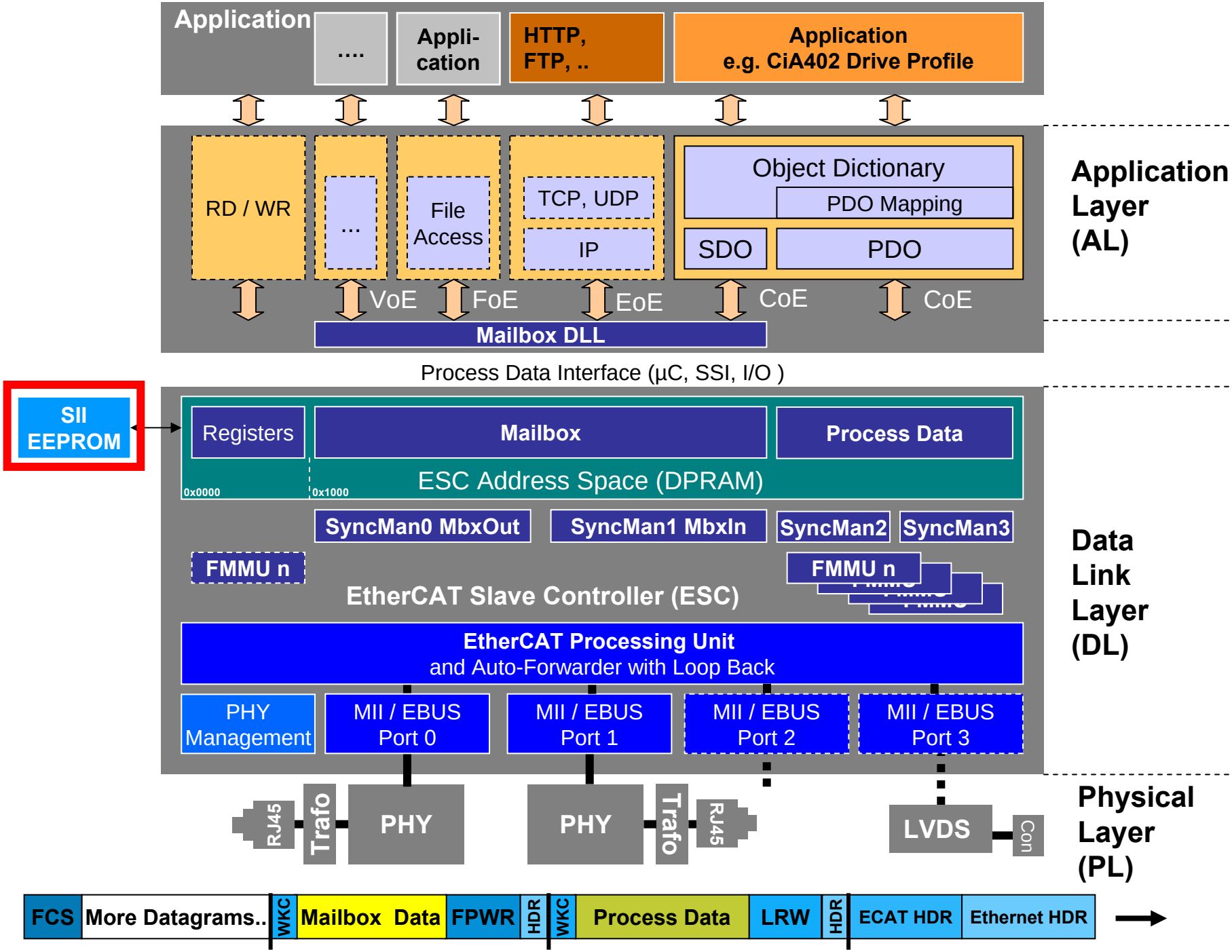
Application
....
Appli-
cation
HTTP,
FTP, ..
Application
e.g. CiA402 Drive Profile
RD / WR
...
File
Access
TCP, UDP
IP
Object Dictionary
PDO Mapping
SDO
PDO
VoE
FoE
EoE
CoE
CoE
Mailbox DLL
Application
Layer
(AL)
Process Data Interface (µC, SSI, I/O)
SII
EEPROM
Registers
Mailbox
Process Data
0x0000
0x1000
ESC Address Space (DPRAM)
SyncMan0 MbxOut
SyncMan1 MbxIn
SyncMan2
SyncMan3
FMMU n
FMMU n
EtherCAT Slave Controller (ESC)
EtherCAT Processing Unit
and Auto-Forwarder with Loop Back
PHY
Management
MII / EBUS
Port 0
MII / EBUS
Port 1
MII / EBUS
Port 2
MII / EBUS
Port 3
Data
Link
Layer
(DL)
RJ45
Trafo
PHY
PHY
Trafo
RJ45
LVDS
Con
Physical
Layer
(PL)
FCS
More Datagrams..
WKC
Mailbox Data
FPWR
HDR
WKC
Process Data
LRW
HDR
ECAT HDR
Ethernet HDR

Purpose of Slave Information Interface

EtherCAT Basics
Slave Structure
Device Model (ISO/OSI)
Physical Layer
Data Link Layer
Frame Structure
Addressing
Commands
Memory/Registers
SyncManager
FMMU
Diagnosis
Distributed Clocks
Application Layer
State Machine
Mailbox
Mailbox Interface
EoE Ethernet
CoE CANopen
FoE File Access
SoE Servo Drive
ESI: Device Description
SII: Slave Information /IF
Device Profiles
Modular Devices
Drives
Configuration Tool
EtherCAT Master
Standards&Implementation

- Slave Information Interface (SII) is mandatory for each EtherCAT Slave Device
- Information is stored in an EEPROM
  - I^2C Interface
  - 1 kByte … 4 MByte
- SII contains
  - ESC configuraiton data (mandatory)
  - boot configuration data
  - device identity (mandatory)
    - Vendor Id, Product Code, Revision No, Serial No (same information in CoE object 0x1018)
  - application information data
- Contains additional information
  - subdivided in categories

© EtherCAT Technology Group

SII – EEPROM Content

Demo

EtherCAT Basics
Slave Structure
Device Model (ISO/OSI)
Physical Layer
Data Link Layer
- Frame Structure
- Addressing
- Commands
- Memory/Registers
- SyncManager
- FMMU
- Diagnosis

Distributed Clocks
Application Layer
- State Machine

Mailbox
- Mailbox Interface
- EoE Ethernet
- CoE CANopen
- FoE File Access
- SoE Servo Drive

ESI: Device Description
SII: Slave Information /IF
Device Profiles
- Modular Devices
- Drives

Configuration Tool
EtherCAT Master
Standards&Implementation

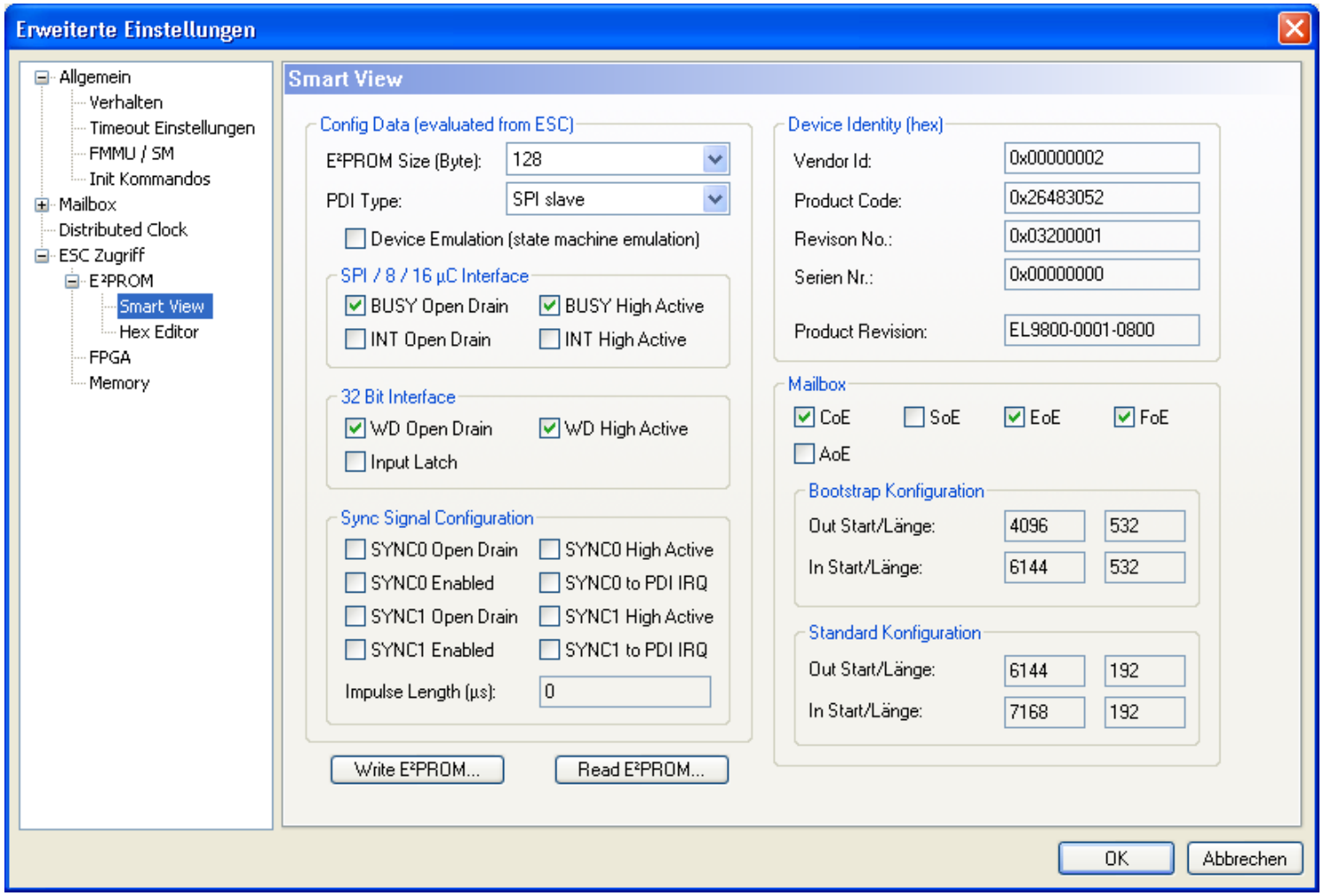

© EtherCAT Technology Group

SII – EEPROM Layout

EtherCAT Basics
Slave Structure
Device Model (ISO/OSI)
Physical Layer
Data Link Layer
- Frame Structure
- Addressing
- Commands
- Memory/Registers
- SyncManager
- FMMU
- Diagnosis

Distributed Clocks
Application Layer
- State Machine

Mailbox
- Mailbox Interface
- EoE Ethernet
- CoE CANopen
- FoE File Access
- SoE Servo Drive

ESI: Device Description
SII: Slave Information /IF
Device Profiles
- Modular Devices
- Drives

Configuration Tool
EtherCAT Master
Standards&Implementation

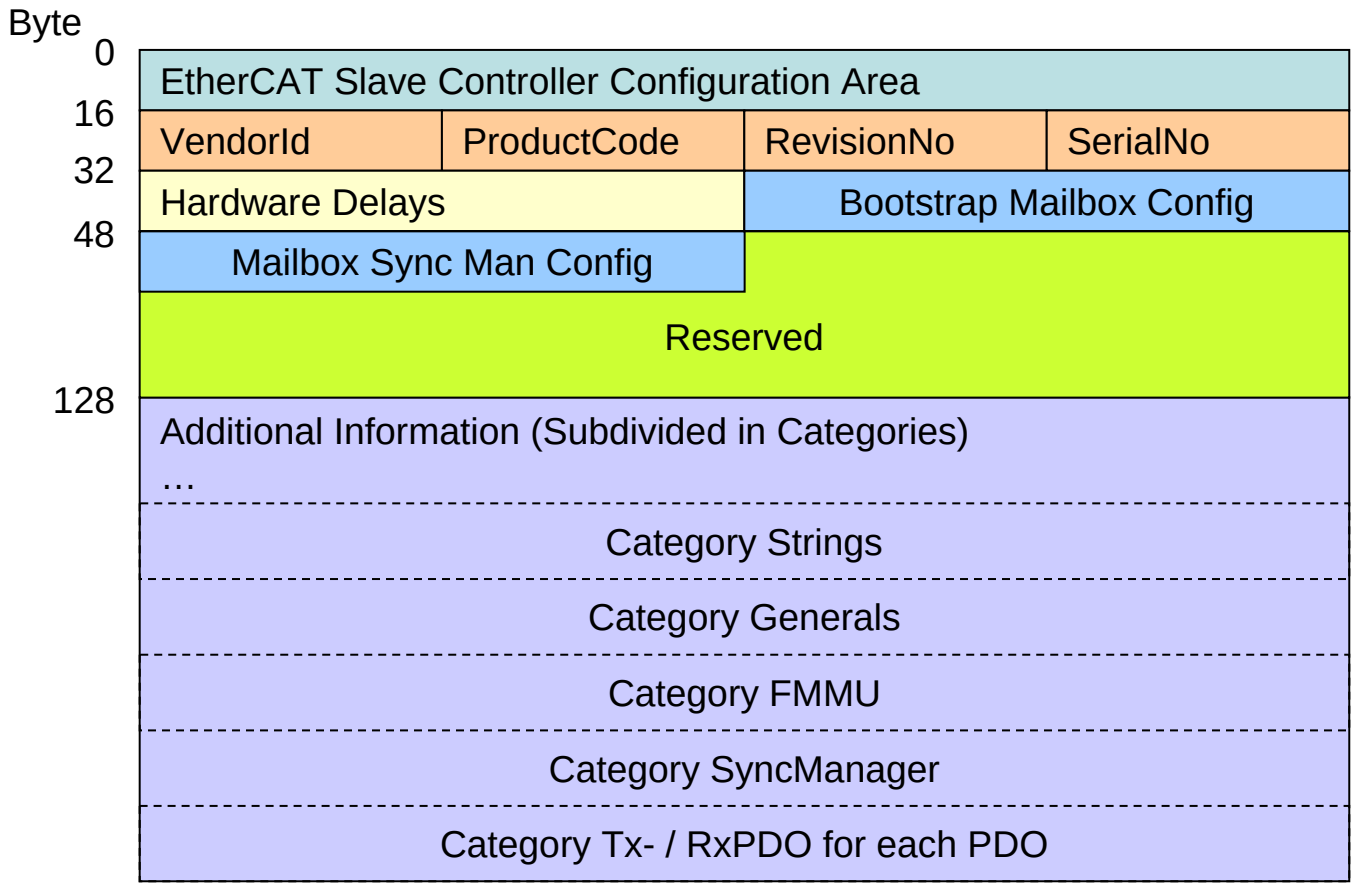

© EtherCAT Technology Group

EEPROM – Slave Configuration Area

EtherCAT Basics
Slave Structure
Device Model (ISO/OSI)
Physical Layer
Data Link Layer
Frame Structure
Addressing
Commands
Memory/Registers
SyncManager
FMMU
Diagnosis
Distributed Clocks
Application Layer
State Machine
Mailbox
Mailbox Interface
EoE Ethernet
CoE CANopen
FoE File Access
SoE Servo Drive
ESI: Device Description
SII: Slave Information /IF
Device Profiles
Modular Devices
Drives
Configuration Tool
EtherCAT Master
Standards&Implementation

EEPROM Word Address	Parameter	Description	Corresp. Register
0	PDI Control	Initialization value for PDI Control register (EEPROM ADR 0x0000.9 is also mapped to register 0x0110.2)	0x0140 0x0141
1	PDI configuration,	Initialization value for PDI Configuration register Depends on the selected PDI, Configuration of Sync0 and Sync1 Pin	0x0150 0x0151
2	Pulse length of SYNC signals	Initialization value for Pulse Length of SYNC Signals register in Units of 10 ns	0x0982 0x0983
3	Extended PDI configuration	Initialization value for extended PDI Configuration register	0x0152 0x0153
4	Configured Station Alias	Initialization value for Configured Station Alias Address register	0x0012 0x0013
5, 6	Reserved		
7	Checksum	CRC of first 6 words (x^8+x^2+x+1, initial value 0xFF)	

© EtherCAT Technology Group

SII – Categories

EtherCAT Basics
Slave Structure
Device Model (ISO/OSI)
Physical Layer
Data Link Layer
Frame Structure
Addressing
Commands
Memory/Registers
SyncManager
FMMU
Diagnosis
Distributed Clocks
Application Layer
State Machine
Mailbox
Mailbox Interface
EoE Ethernet
CoE CANopen
FoE File Access
SoE Servo Drive
ESI: Device Description
SII: Slave Information /IF
Device Profiles
Modular Devices
Drives
Configuration Tool
EtherCAT Master
Standards&Implementation

- Contains optional information
- Divided in categories
  - Standard category(s)
  - Vendor category(s)
- Same header for all categories
  - Category Type
  - Word-Length of data

16 Bit	16 Bit	
Category	Length	Data…

Category	Meaning
STRINGS	Text strings
General	Device Information
FMMU	FMMU usage
SyncManger	Modes of operation, Enable
TxPDO	Transmit PDO Entries
RxPDO	Receive PDO Entries

© EtherCAT Technology Group

SII - Content

Device Types:		No PD MBX	Fixed PD No MBX	Fixed PD No OD	Fixed PD OD	Variable PD OD
Info Struct (128 Byte)	ESC Info	M	M	M	M	M
	Identity	M	M	M	M	M
	Bootstrap Mbx Info	O		O	O	O
	Standard Mbx Info	M		M	M	M
Categories	Strings (10)	O	O	O	O	O
	General (30)	M	M	M	M	M
	Sync Mng (41)	O	M	M	M	M
	FMMU (40)	O	O	O	O	M
	PDO (50, 51)		M	M	O (same as OD)	
	OP Modes (60) Discussion?		O	O	O	O
	Timeouts (70)	O	O	O	O	O
	Object Dictionary Entries (80)	O	O	O		

© EtherCAT Technology Group

SII - Category for CoE Object Dictionary Entries (80)

EtherCAT Basics
Slave Structure
Device Model (ISO/OSI)
Physical Layer
Data Link Layer
Frame Structure
Addressing
Commands
Memory/Registers
SyncManager
FMMU
Diagnosis
Distributed Clocks
Application Layer
State Machine
Mailbox
Mailbox Interface
EoE Ethernet
CoE CANopen
FoE File Access
SoE Servo Drive
ESI: Device Description
SII: Slave Information /IF
Device Profiles
Modular Devices
Drives
Configuration Tool
EtherCAT Master
Standards&Implementation

- Only used for slave devices without any Object Dictionary
- Content of a virtual Object Dictionary – comparable to the virtual OD in the device description files (XML)
- Provides information for the master that are already defined by existing profiles
- Examples are
  - Device type…
  - DC settings (Object 1C32h, 1C33h…)
  - …

© EtherCAT Technology Group

PDI access to SII (E²PROM)

EtherCAT Basics
Slave Structure
Device Model (ISO/OSI)
Physical Layer
Data Link Layer
Frame Structure
Addressing
Commands
Memory/Registers
SyncManager
FMMU
Diagnosis
Distributed Clocks
Application Layer
State Machine
Mailbox
Mailbox Interface
EoE Ethernet
CoE CANopen
FoE File Access
SoE Servo Drive
ESI: Device Description
SII: Slave Information /IF
Device Profiles
Modular Devices
Drives
Configuration Tool
EtherCAT Master
Standards&Implementation

- Standard: EEPROM assigned to EtherCAT Master
- Master can grant access to PDI
  - Change from INIT to PREOP Master
    - PDI can check SII content (e.g. Firmware Revision compatible to Hardware Revision)
      (before ALCtrl=2 until ALStatus=2)
  - Change from INIT to BOOT and while in BOOT
    - After Firmware Update PDI can update SII information
      (before ALCtrl=3, ALCtrl=1 until ALStatus=1)
- Slave Sample Code V4.0 contains SII access from PDI

© EtherCAT Technology Group

Device Profiles – Motivation

EtherCAT Basics
Slave Structure
Device Model (ISO/OSI)
Physical Layer
Data Link Layer
Frame Structure
Addressing
Commands
Memory/Registers
SyncManager
FMMU
Diagnosis
Distributed Clocks
Application Layer
State Machine
Mailbox
Mailbox Interface
EoE Ethernet
CoE CANopen
FoE File Access
SoE Servo Drive
ESI: Device Description
SII: Slave Information /IF
Device Profiles
Modular Devices
Drives
Configuration Tool
EtherCAT Master
Standards&Implementation

- The main issues of this device model are
  - modeling of structures within a device
  - usable for a large number of devices from very simple one to complex sub-structured
  - easy way for master and configuration devices to handle the device
  - use of similar channel profiles in all device types shown below

→ Profile for Modular Devices

© EtherCAT Technology Group

Modular Device Profile

EtherCAT Basics
Slave Structure
Device Model (ISO/OSI)
Physical Layer
Data Link Layer
- Frame Structure
- Addressing
- Commands
- Memory/Registers
- SyncManager
- FMMU
- Diagnosis

Distributed Clocks
Application Layer
- State Machine

Mailbox
- Mailbox Interface
- EoE Ethernet
- CoE CANopen
- FoE File Access
- SoE Servo Drive

ESI: Device Description
SII: Slave Information /IF
Device Profiles
- Modular Devices
- Drives

Configuration Tool
EtherCAT Master
Standards&Implementation

- EtherCAT supports complex slaves
- E.g. devices with physical modules to be connected (modular device) or devices with different operation modes (complex device).
- The Modular Device Profile defines
  - A modeling of structures within a device, e.g. the Object dictionary
  - An easy way for master and configuration devices to handle the device

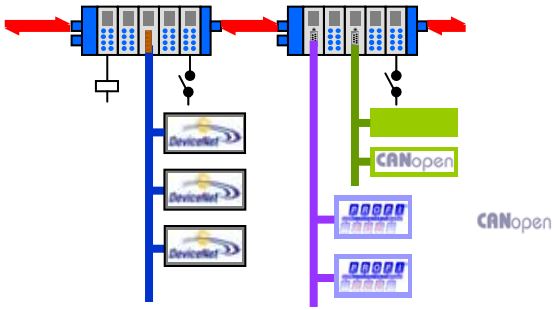

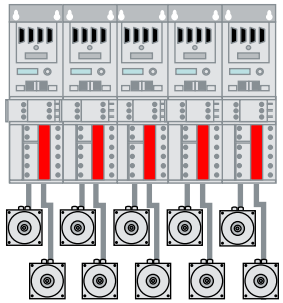

© EtherCAT Technology Group

Modular Device Profile

EtherCAT Basics
Slave Structure
Device Model (ISO/OSI)
Physical Layer
Data Link Layer
Frame Structure
Addressing
Commands
Memory/Registers
SyncManager
FMMU
Diagnosis
Distributed Clocks
Application Layer
State Machine
Mailbox
Mailbox Interface
EoE Ethernet
CoE CANopen
FoE File Access
SoE Servo Drive
ESI: Device Description
SII: Slave Information /IF
Device Profiles
Modular Devices
Drives
Configuration Tool
EtherCAT Master
Standards&Implementation

- Gateways from EtherCAT to legacy Fieldbusses like
  - CANopen*
  - Profibus
  - DeviceNet
  - …

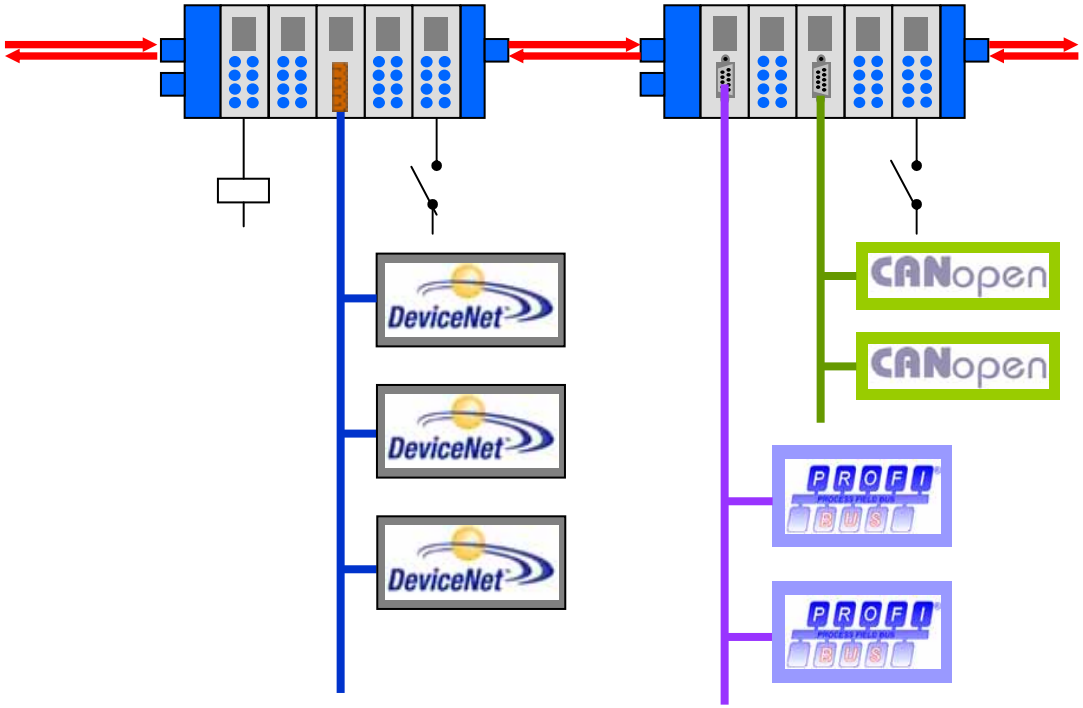

© EtherCAT Technology Group
* CANopen is a trademark of the CAN in Automation e.V.

Modular Device Profile

EtherCAT Basics
Slave Structure
Device Model (ISO/OSI)
Physical Layer
Data Link Layer
- Frame Structure
- Addressing
- Commands
- Memory/Registers
- SyncManager
- FMMU
- Diagnosis

Distributed Clocks
Application Layer
- State Machine

Mailbox
- Mailbox Interface
- EoE Ethernet
- CoE CANopen
- FoE File Access
- SoE Servo Drive

ESI: Device Description
SII: Slave Information /IF
Device Profiles
- Modular Devices
- Drives

Configuration Tool
EtherCAT Master
Standards&Implementation

- Extendable Fieldbus coupler with internal backbone

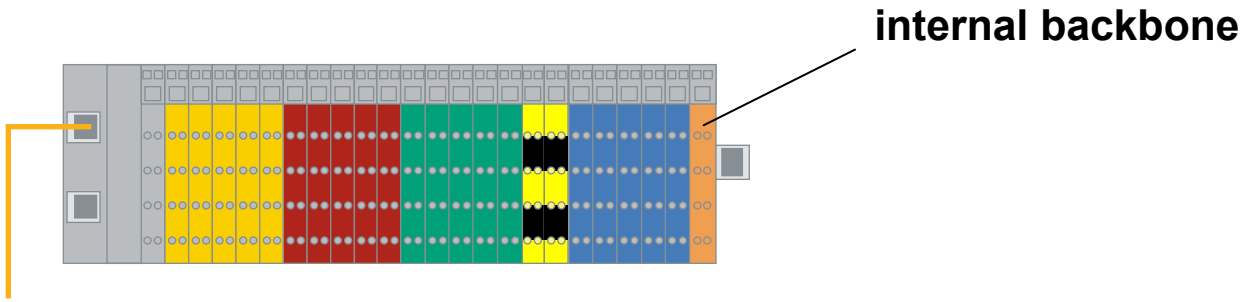

- Multi Axis Servo Drive with different function groups

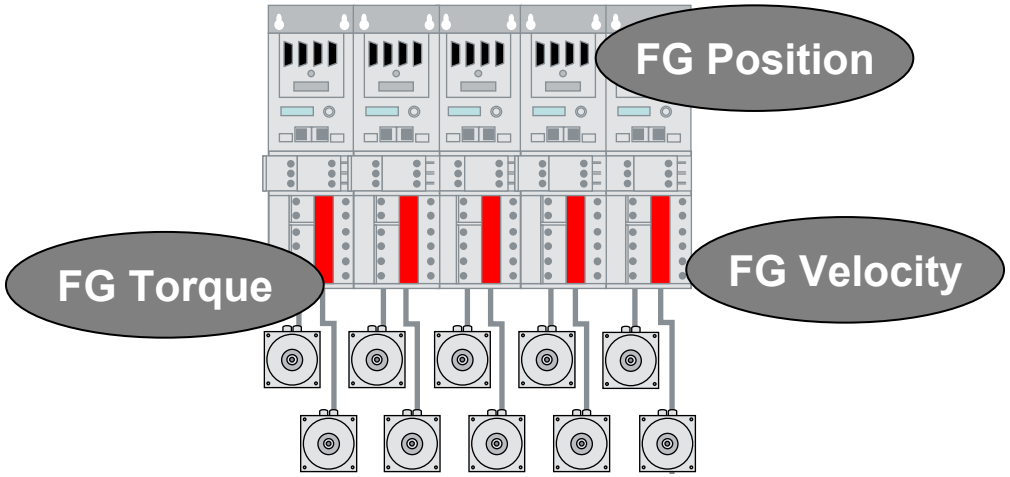

© EtherCAT Technology Group

Object Dictionary of Modular Device Profile

EtherCAT Basics
Slave Structure
Device Model (ISO/OSI)
Physical Layer
Data Link Layer
Frame Structure
Addressing
Commands
Memory/Registers
SyncManager
FMMU
Diagnosis
Distributed Clocks
Application Layer
State Machine
Mailbox
Mailbox Interface
EoE Ethernet
CoE CANopen
FoE File Access
SoE Servo Drive
ESI: Device Description
SII: Slave Information /IF
Device Profiles
Modular Devices
Drives
Configuration Tool
EtherCAT Master
Standards&Implementation

- 0x0000 – 0x0FFF Data Type Area
- 0x1000 – 0x1FFF: Communication Area
- 0x2000 – 0x5FFF: Manufacturer specific Area
- **0x6000 – 0x6FFF: Input Area**
- **0x7000 – 0x7FFF: Output Area**
- **0x8000 – 0x8FFF: Configuration Area**
- **0x9000 – 0x9FFF: Information Area**
- **0xA000 – 0xAFFF: Diagnosis Area**
- **0xB000 – 0xBFFF: Service Transfer Area**
- 0xC000 – 0xEFFF: Reserved Area
- **0xF000h – 0xFFFF: Device Area**

Different Ranges according to CANopen* DS301!

© EtherCAT Technology Group
* CANopen is a trademark of the CAN in Automation e.V.

Model of a modular device

EtherCAT Basics
Slave Structure
Device Model (ISO/OSI)
Physical Layer
Data Link Layer
- Frame Structure
- Addressing
- Commands
- Memory/Registers
- SyncManager
- FMMU
- Diagnosis

Distributed Clocks
Application Layer
- State Machine

Mailbox
- Mailbox Interface
- EoE Ethernet
- CoE CANopen
- FoE File Access
- SoE Servo Drive

ESI: Device Description
SII: Slave Information /IF
Device Profiles
- Modular Devices
- Drives

Configuration Tool
EtherCAT Master
Standards&Implementation

RxPDO (Output) 0x16xx	0x1600	0x1601		0x160n
Output Entries (0x7xx)	0x7000 – 0x700F	0x7010 – 0x701F		0x7nn0 – 0x7nnF
TxPDO (Input) 0x1Axx	0x1A00	0x1A01		0x1Ann
Input Entries (0x7xx)	0x6000 – 0x600F	0x6010 – 0x601F		0x6nn0 – 0x6nnF
Configuration Parameter	0x8000 – 0x800F	0x8010 – 0x801F		0x8nn0 – 0x8nnF
Information	0x9000 – 0x900F	0x9010 – 0x901F		0x9nn0 – 0x9nnF
Configuration Area 0x1000 – 0x1FFF				
Device Parameter 0xF000 – 0xFFFF	Module 0	Module 1	...	Module nn
MDP-Gerät (Gateway)	**Feldbus-Slave 0**	**Feldbus-Slave 1**		**Feldbus-Slave nn**

© EtherCAT Technology Group

Modular Device Profile

EtherCAT Basics
Slave Structure
Device Model (ISO/OSI)
Physical Layer
Data Link Layer
Frame Structure
Addressing
Commands
Memory/Registers
SyncManager
FMMU
Diagnosis
Distributed Clocks
Application Layer
State Machine
Mailbox
Mailbox Interface
EoE Ethernet
CoE CANopen
FoE File Access
SoE Servo Drive
ESI: Device Description
SII: Slave Information /IF
Device Profiles
Modular Devices
Drives
Configuration Tool
EtherCAT Master
Standards&Implementation

- The modular device profile can be applied for different device types
  - Fieldbus Gateways
    Gateways to other fieldbusses
  - Modular Devices
    with physical connectable modules and/or several functional modules
  - Module Devices
    which is connected directly to EtherCAT and consists of several channels

- Standard configuration
  - 16 objects per module in a specific area
  - Up to 255 modules available
  - This standard can be adapted to the device requirements

© EtherCAT Technology Group

Example for Dynamic Device Profile

EtherCAT Basics
Slave Structure
Device Model (ISO/OSI)
Physical Layer
Data Link Layer
Frame Structure
Addressing
Commands
Memory/Registers
SyncManager
FMMU
Diagnosis
Distributed Clocks
Application Layer
State Machine
Mailbox
Mailbox Interface
EoE Ethernet
CoE CANopen
FoE File Access
SoE Servo Drive
ESI: Device Description
SII: Slave Information /IF
Device Profiles
Modular Devices
Drives
Configuration Tool
EtherCAT Master
Standards&Implementation

BK1120 + DI 4 + DO 8 + AO 2

Device	Slot 0	Slot 1	Slot 2
RxPDO (Output)	0x1600	0x1601	0x1602
Output Entries	0x7000	0x7010: SI0, 1-8	0x7020: SI0, 1-2
TxPDO (Input)	0x1A00	0x1A01	0x1A02
Input Entries	0x6000: SI 0,1-4	0x6010	0x6020: SI 0, 1-2
	Dig. Input 4	Dig. Output 8	Anal. Output 2

EtherCAT Slave BK1120

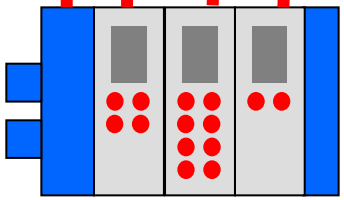

SI…Subindex (SI0 = number of SIs of this object)

© EtherCAT Technology Group

MDP – Profile Numbering

EtherCAT Basics
Slave Structure
Device Model (ISO/OSI)
Physical Layer
Data Link Layer
Frame Structure
Addressing
Commands
Memory/Registers
SyncManager
FMMU
Diagnosis
Distributed Clocks
Application Layer
State Machine
Mailbox
Mailbox Interface
EoE Ethernet
CoE CANopen
FoE File Access
SoE Servo Drive
ESI: Device Description
SII: Slave Information /IF
Device Profiles
Modular Devices
Drives
Configuration Tool
EtherCAT Master
Standards&Implementation

- MDP Profile Number is 5001 (= Object 0x1000, Bit 0-15)
- Module Profile Number (= Object 0x1000, Bit 16-31)

Module Profile Number	Description
1000	Ethernet gateway (EoE)
1100	EtherCAT Master (for Mailbox Gateway)
1110	EtherCAT Slave
1120	KBus Master
3100	PROFIBUS Master
3110	PROFIBUS Slave
4000	Interbus Master
4010	Interbus Slave
5100	CANopen* Master
5110	CANopen* Slave
5200	DeviceNet Master
5210	DeviceNet Slave
6200	ASI-Master
6220	IO Link-Master

© EtherCAT Technology Group
* CANopen is a trademark of the CAN in Automation e.V.

CiA402 Drive Profile

EtherCAT Basics
Slave Structure
Device Model (ISO/OSI)
Physical Layer
Data Link Layer
Frame Structure
Addressing
Commands
Memory/Registers
SyncManager
FMMU
Diagnosis
Distributed Clocks
Application Layer
State Machine
Mailbox
Mailbox Interface
EoE Ethernet
CoE CANopen
FoE File Access
SoE Servo Drive
ESI: Device Description
SII: Slave Information /IF
Device Profiles
Modular Devices
Drives
Configuration Tool
EtherCAT Master
Standards&Implementation

- IEC 61800-7
  Generic interface and use of profiles for power drive systems
  - Part 7-1: Interface definition
  - Part 7-2: Profile specifications
  - Part 7-3: Mapping of profiles to network technologies
    - Mapping CiA402 to EtherCAT
    - Mapping SERCOS profile to EtherCAT
- ETG.6010 Implementation Guideline for the CiA402 Drive Profile
  - Specify a common behavior of EtherCAT CiA402 servo drives according to IEC 61800-7
- Scope
  - EtherCAT CiA402 Servo Drives
  - No frequency converter, no stepper
  - The mapping of the SERCOS profile to EtherCAT described in IEC 61800-7-304 is not part of this guideline
- Sample Implementation
  - Within Slave Sample Code V4.30 according to ETG.6010

© EtherCAT Technology Group

Drive Profile

EtherCAT Basics
Slave Structure
Device Model (ISO/OSI)
Physical Layer
Data Link Layer
- Frame Structure
- Addressing
- Commands
- Memory/Registers
- SyncManager
- FMMU
- Diagnosis

Distributed Clocks
Application Layer
- State Machine

Mailbox
- Mailbox Interface
- EoE Ethernet
- CoE CANopen
- FoE File Access
- SoE Servo Drive

ESI: Device Description
SII: Slave Information /IF
Device Profiles
- Modular Devices
- Drives

Configuration Tool
EtherCAT Master
Standards&Implementation

EtherCAT is Part of the drives standard in Annex A and D

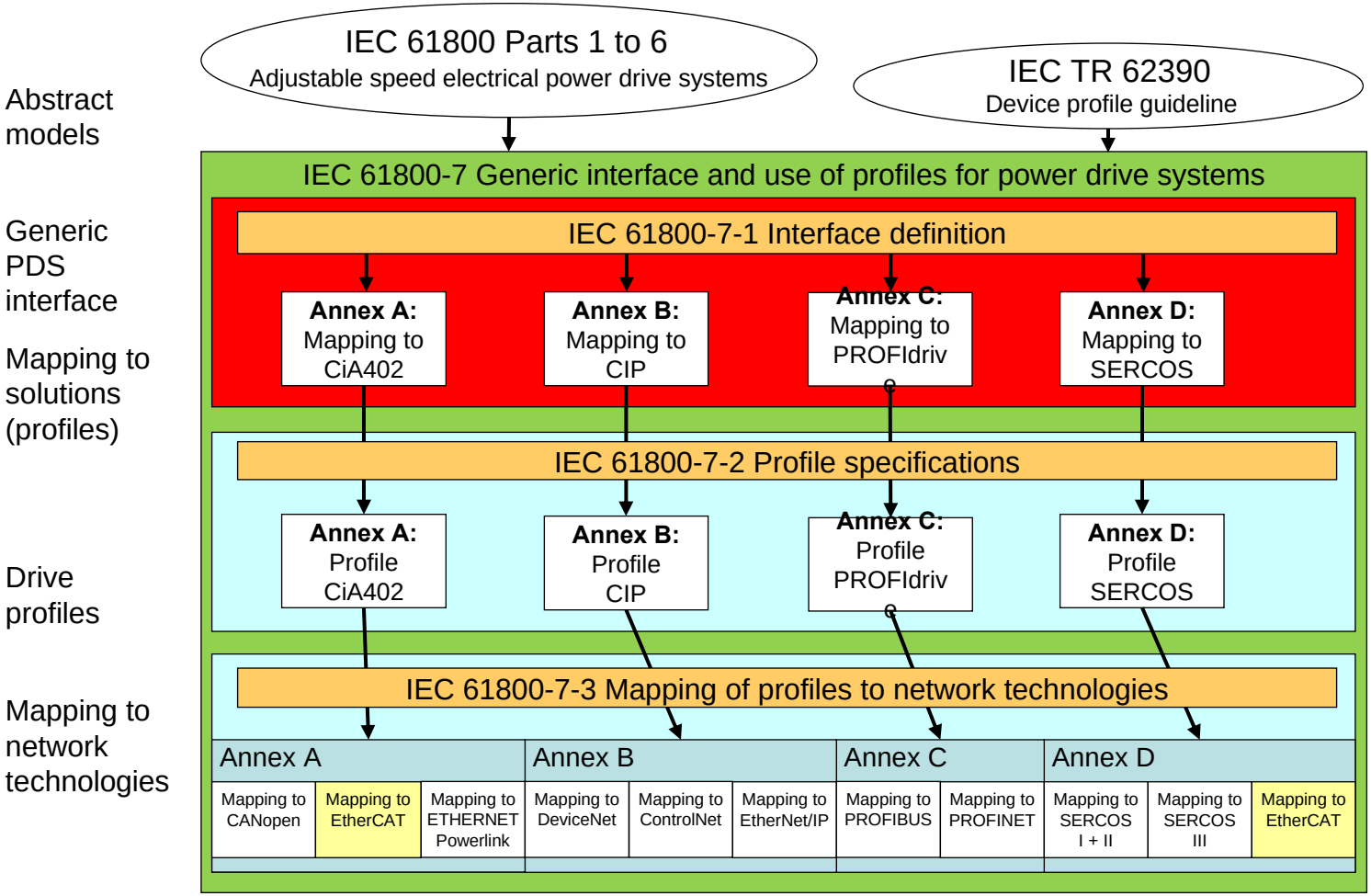

SERCOS interface™ is a trade name of Interests Group SERCOS interface e.V. Compliance to this profile does not require use of the trade name SERCOS interface. Use of the trade name SERCOS interface requires permission of the trade name holder.

* CANopen is a trademark of the CAN in Automation e.V.

© EtherCAT Technology Group

Drive Control - Modes of Operation

EtherCAT Basics
Slave Structure
Device Model (ISO/OSI)
Physical Layer
Data Link Layer
- Frame Structure
- Addressing
- Commands
- Memory/Registers
- SyncManager
- FMMU
- Diagnosis

Distributed Clocks
Application Layer
- State Machine

Mailbox
- Mailbox Interface
- EoE Ethernet
- CoE CANopen
- FoE File Access
- SoE Servo Drive

ESI: Device Description
SII: Slave Information /IF
Device Profiles
- Modular Devices
- Drives

Configuration Tool
EtherCAT Master
Standards&Implementation

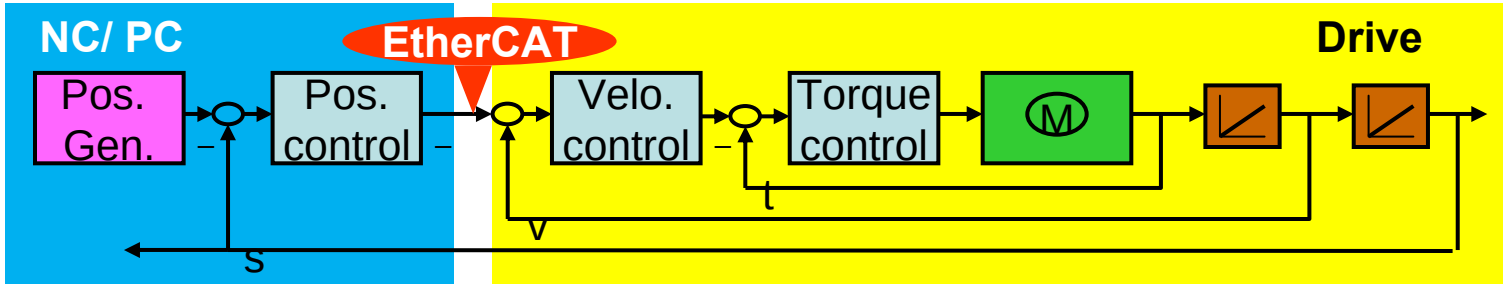

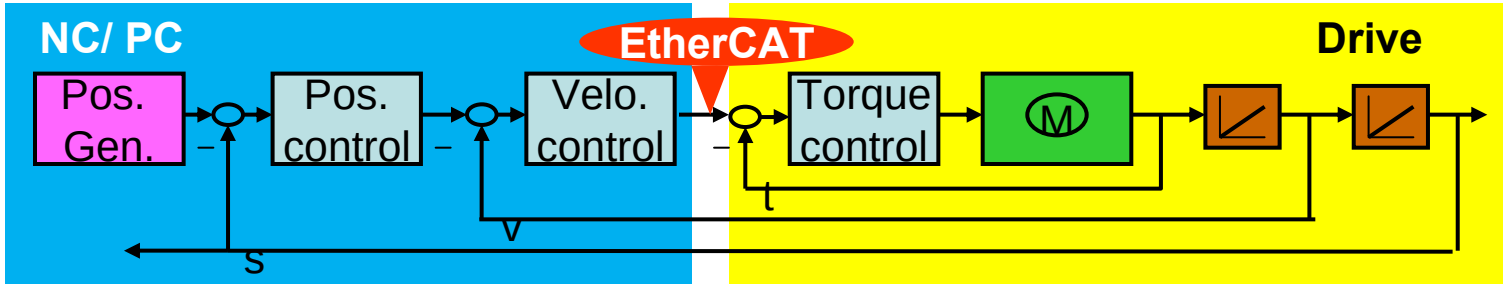

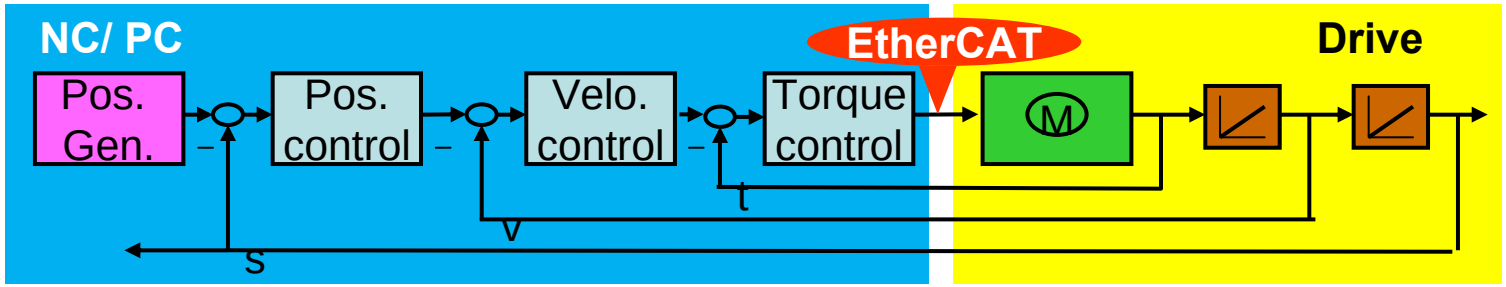

© EtherCAT Technology Group

ETG.6010 CiA402 Implementation Guideline

EtherCAT Basics
Slave Structure
Device Model (ISO/OSI)
Physical Layer
Data Link Layer
Frame Structure
Addressing
Commands
Memory/Registers
SyncManager
FMMU
Diagnosis
Distributed Clocks
Application Layer
State Machine
Mailbox
Mailbox Interface
EoE Ethernet
CoE CANopen
FoE File Access
SoE Servo Drive
ESI: Device Description
SII: Slave Information /IF
Device Profiles
Modular Devices
Drives
Configuration Tool
EtherCAT Master
Standards&Implementation

- Contents
  - Clarifications of the state machine
  - Modes of operation
  - Function Groups (FG)
    - FG Position, FG Velocity, FG Torque
    - FG Torque Limiting, FG Homing, FG Touch Probe
  - Endless Positioning
  - For PDO Mapping only recommendation

© EtherCAT Technology Group

EtherCAT Configuration Tool

Demo

EtherCAT Basics
Slave Structure
Device Model (ISO/OSI)
Physical Layer
Data Link Layer
Frame Structure
Addressing
Commands
Memory/Registers
SyncManager
FMMU
Diagnosis
Distributed Clocks
Application Layer
State Machine
Mailbox
Mailbox Interface
EoE Ethernet
CoE CANopen
FoE File Access
SoE Servo Drive
ESI: Device Description
SII: Slave Information /IF
Device Profiles
Modular Devices
Drives
Configuration Tool
EtherCAT Master
Standards&Implementation

- Configure EtherCAT Slave devices
  - Evaluate XML device description
  - Evaluate EEPROM information – if online
- Generate network initialization commands
  - Information for the EtherCAT driver
  - Initialization commands correspond to State Machine transitions
- Generates cyclic commands
  - Information for the EtherCAT driver

© EtherCAT Technology Group

Network Configuration

EtherCAT Basics
Slave Structure
Device Model (ISO/OSI)
Physical Layer
Data Link Layer
- Frame Structure
- Addressing
- Commands
- Memory/Registers
- SyncManager
- FMMU
- Diagnosis

Distributed Clocks
Application Layer
- State Machine

Mailbox
- Mailbox Interface
- EoE Ethernet
- CoE CANopen
- FoE File Access
- SoE Servo Drive

ESI: Device Description
SII: Slave Information /IF
Device Profiles
- Modular Devices
- Drives

Configuration Tool
EtherCAT Master
Standards&Implementation

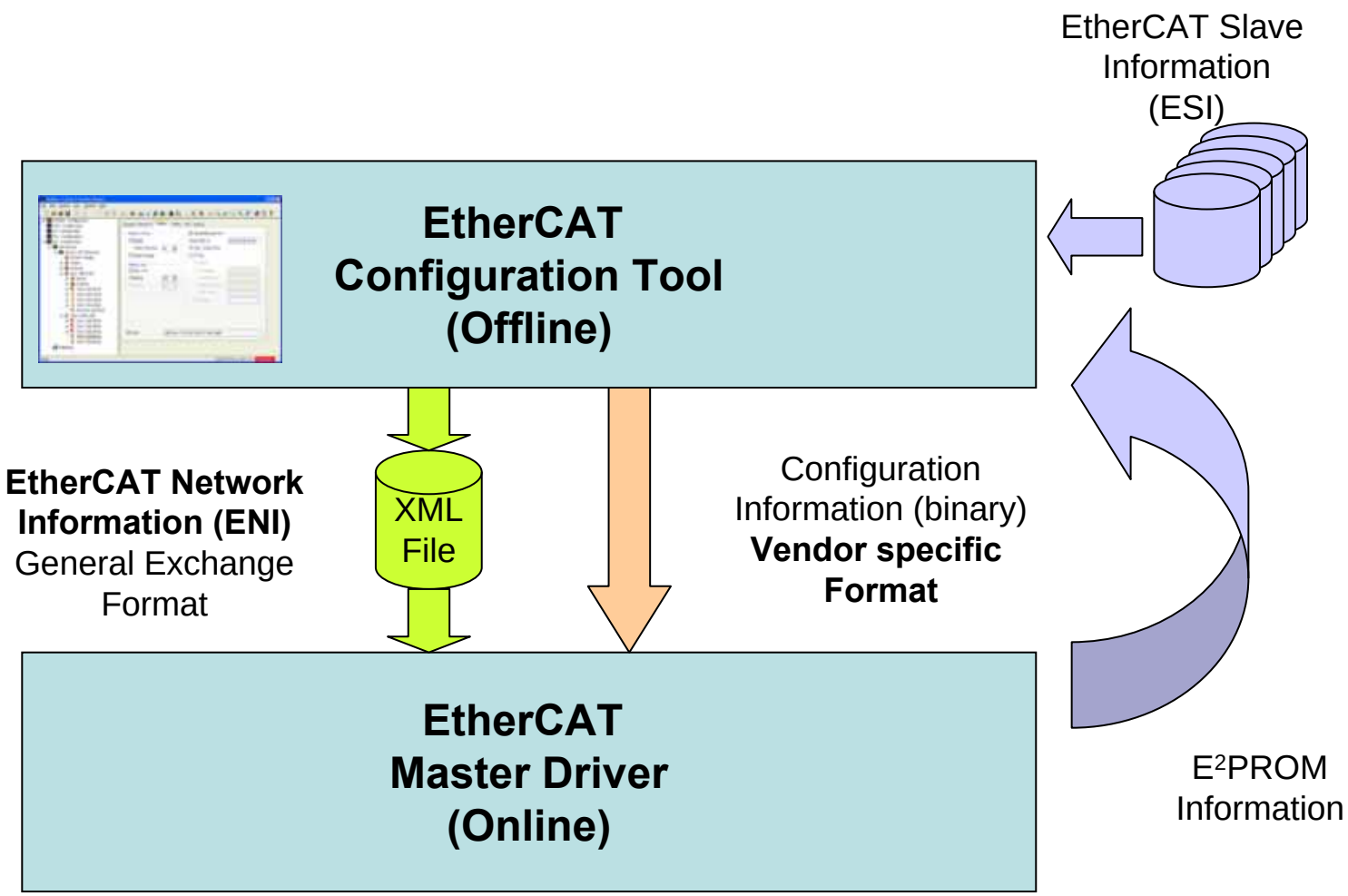

© EtherCAT Technology Group

EtherCAT Configuration Exchange Format

EtherCAT Basics
Slave Structure
Device Model (ISO/OSI)
Physical Layer
Data Link Layer
Frame Structure
Addressing
Commands
Memory/Registers
SyncManager
FMMU
Diagnosis
Distributed Clocks
Application Layer
State Machine
Mailbox
Mailbox Interface
EoE Ethernet
CoE CANopen
FoE File Access
SoE Servo Drive
ESI: Device Description
SII: Slave Information /IF
Device Profiles
Modular Devices
Drives
Configuration Tool
EtherCAT Master
Standards&Implementation

- Vendor and Driver independent format
- Master Vendor must not imperatively develop an own Configuration Tool
- Contains
  - initialization commands – per slave device
  - cyclic process data commands
  - information about the mailboxes

© EtherCAT Technology Group

EtherCAT Master

EtherCAT Basics
Slave Structure
Device Model (ISO/OSI)
Physical Layer
Data Link Layer
Frame Structure
Addressing
Commands
Memory/Registers
SyncManager
FMMU
Diagnosis
Distributed Clocks
Application Layer
State Machine
Mailbox
Mailbox Interface
EoE Ethernet
CoE CANopen
FoE File Access
SoE Servo Drive
ESI: Device Description
SII: Slave Information /IF
Device Profiles
Modular Devices
Drives
Configuration Tool
EtherCAT Master
Standards&Implementation

- Configuration with help of an EtherCAT configuration XML file
- Send and receive raw Ethernet frames from a network adapter
- Management of the EtherCAT slaves
  - Sending init commands defined in the XML file
- Mailbox Communication
  - CAN application protocol over EtherCAT protocol (CoE)
  - Servo-Profile over EtherCAT protocol (SoE)
  - Ethernet over EtherCAT protocol (EoE)
  - Filetransfer over EtherCAT protocol (FoE)
- Software-integrated switch functionality
- Cyclic process data communication

© EtherCAT Technology Group

What does an EtherCAT Master do?

EtherCAT Basics
Slave Structure
Device Model (ISO/OSI)
Physical Layer
Data Link Layer
Frame Structure
Addressing
Commands
Memory/Registers
SyncManager
FMMU
Diagnosis
Distributed Clocks
Application Layer
State Machine
Mailbox
Mailbox Interface
EoE Ethernet
CoE CANopen
FoE File Access
SoE Servo Drive
ESI: Device Description
SII: Slave Information /IF
Device Profiles
Modular Devices
Drives
Configuration Tool
EtherCAT Master
Standards&Implementation

- Parse XML Hardware configuration file (initialization, state machine, and process data mapping)
- Initialization of Fieldbus
- Runs State Machine
- Interface to application
- Interface to network driver
- Sends cyclic process data commands
- Sends mailbox commands
- Handles various protocols

© EtherCAT Technology Group

EtherCAT Master Block Diagram

EtherCAT Basics
Slave Structure
Device Model (ISO/OSI)
Physical Layer
Data Link Layer
- Frame Structure
- Addressing
- Commands
- Memory/Registers
- SyncManager
- FMMU
- Diagnosis

Distributed Clocks
Application Layer
- State Machine

Mailbox
- Mailbox Interface
- EoE Ethernet
- CoE CANopen
- FoE File Access
- SoE Servo Drive

ESI: Device Description
SII: Slave Information /IF
Device Profiles
- Modular Devices
- Drives

Configuration Tool
EtherCAT Master
Standards&Implementation

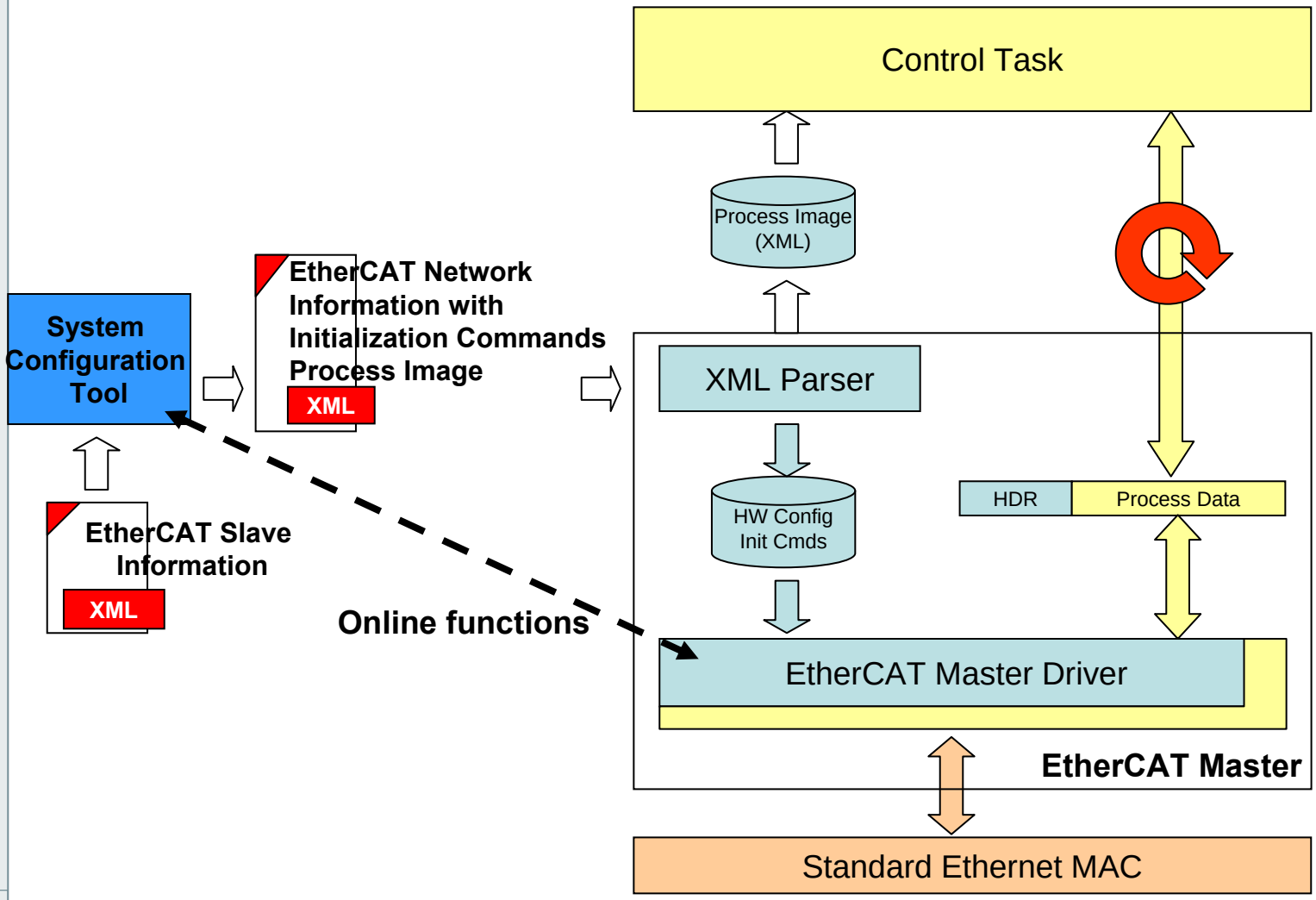

© EtherCAT Technology Group

Prerequisites for EtherCAT Master (Real Time)

EtherCAT Basics
Slave Structure
Device Model (ISO/OSI)
Physical Layer
Data Link Layer
Frame Structure
Addressing
Commands
Memory/Registers
SyncManager
FMMU
Diagnosis
Distributed Clocks
Application Layer
State Machine
Mailbox
Mailbox Interface
EoE Ethernet
CoE CANopen
FoE File Access
SoE Servo Drive
ESI: Device Description
SII: Slave Information /IF
Device Profiles
Modular Devices
Drives
Configuration Tool
EtherCAT Master
Standards&Implementation

- **Hardware**
  - Standard network controller using DMA
    - **NO** special plug in card needed
    - Speed and Quality important
  - No switches or hubs required
  - Cache design, CPU
  - Low jitter, x86 Dual Xeon < 2 µs

- **Software**
  - Real-time Kernel
  - Low Level Network Card Access

© EtherCAT Technology Group

EtherCAT Master Development (Real Time)

EtherCAT Basics
Slave Structure
Device Model (ISO/OSI)
Physical Layer
Data Link Layer
Frame Structure
Addressing
Commands
Memory/Registers
SyncManager
FMMU
Diagnosis
Distributed Clocks
Application Layer
State Machine
Mailbox
Mailbox Interface
EoE Ethernet
CoE CANopen
FoE File Access
SoE Servo Drive
ESI: Device Description
SII: Slave Information /IF
Device Profiles
Modular Devices
Drives
Configuration Tool
EtherCAT Master
Standards&Implementation

1. XML Parser functionality
2. EtherCAT Master driver
   - Interface to configuration tool
   - State machine
   - Interface to application
   - Interface to network card
   - NIC Timing Interface
3. Real Time Kernel

necessary

4. Hardware Configuration Tool
   - 3.rd party configuration tools can be used as the configuration is provided to EtherCAT master in a common format (XML)

optional

© EtherCAT Technology Group

Master Sample Code Structure

EtherCAT Basics
Slave Structure
Device Model (ISO/OSI)
Physical Layer
Data Link Layer
- Frame Structure
- Addressing
- Commands
- Memory/Registers
- SyncManager
- FMMU
- Diagnosis

Distributed Clocks
Application Layer
- State Machine

Mailbox
- Mailbox Interface
- EoE Ethernet
- CoE CANopen
- FoE File Access
- SoE Servo Drive

ESI: Device Description
SII: Slave Information /IF
Device Profiles
- Modular Devices
- Drives

Configuration Tool
EtherCAT Master
Standards&Implementation

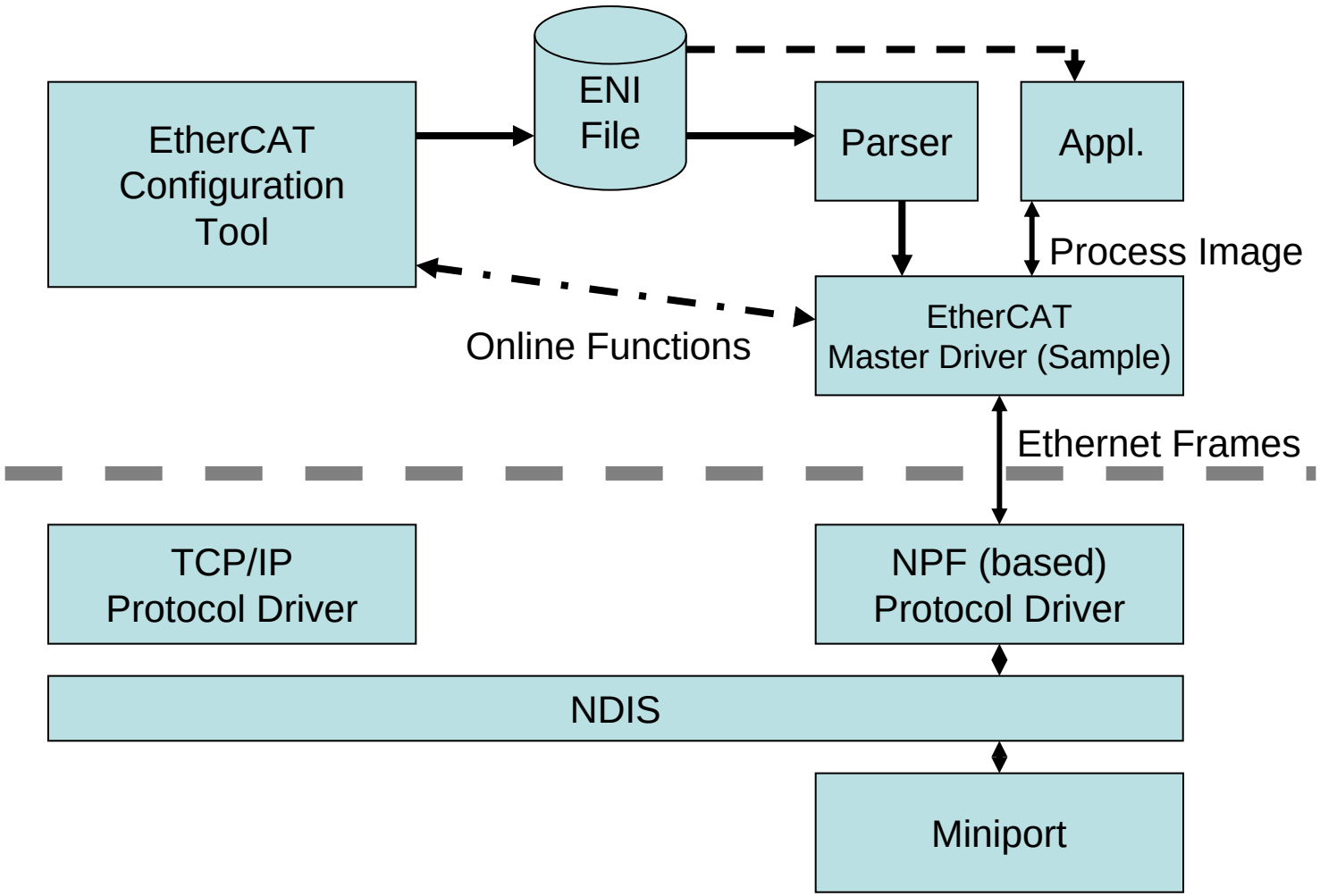

© EtherCAT Technology Group

Master Sample Code Overview

EtherCAT Basics
Slave Structure
Device Model (ISO/OSI)
Physical Layer
Data Link Layer
Frame Structure
Addressing
Commands
Memory/Registers
SyncManager
FMMU
Diagnosis
Distributed Clocks
Application Layer
State Machine
Mailbox
Mailbox Interface
EoE Ethernet
CoE CANopen
FoE File Access
SoE Servo Drive
ESI: Device Description
SII: Slave Information /IF
Device Profiles
Modular Devices
Drives
Configuration Tool
EtherCAT Master
Standards&Implementation

- Sample EtherCAT Master Communication Software (including Source Code)
  - Non Real Time
  - Realized as Windows Application Program (MS Windows XP/2000)
  - Source Code MS C++

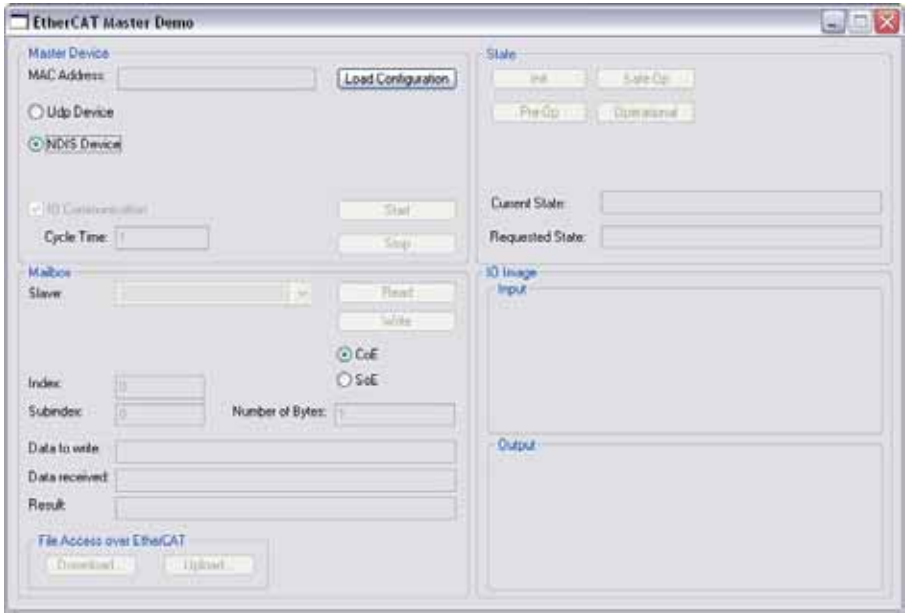

© EtherCAT Technology Group

Standards and References

EtherCAT Basics
Slave Structure
Device Model (ISO/OSI)
Physical Layer
Data Link Layer
Frame Structure
Addressing
Commands
Memory/Registers
SyncManager
FMMU
Diagnosis
Distributed Clocks
Application Layer
State Machine
Mailbox
Mailbox Interface
EoE Ethernet
CoE CANopen
FoE File Access
SoE Servo Drive
ESI: Device Description
SII: Slave Information /IF
Device Profiles
Modular Devices
Drives
Configuration Tool
EtherCAT Master
Standards&Implementation

- Specification of EtherCAT has been done in the EtherCAT Technology Group (ETG)
- Specifications available at www.EtherCAT.org
  - XML File Style sheet
  - Datasheets of ESC, ...
  - Modular Device Profile
  - Reports of ETG TC meetings
- International standardization

© EtherCAT Technology Group

Standards and References

EtherCAT Basics
Slave Structure
Device Model (ISO/OSI)
Physical Layer
Data Link Layer
Frame Structure
Addressing
Commands
Memory/Registers
SyncManager
FMMU
Diagnosis
Distributed Clocks
Application Layer
State Machine
Mailbox
Mailbox Interface
EoE Ethernet
CoE CANopen
FoE File Access
SoE Servo Drive
ESI: Device Description
SII: Slave Information /IF
Device Profiles
Modular Devices
Drives
Configuration Tool
EtherCAT Master
Standards&Implementation

- EtherCAT is part of different international standardization efforts

Standard	Title	Status	Remarks
IEC 61158 and ETG.1000	Digital data communication for measurement and control – Fieldbus for use in industrial control systems	IS	Type 12: EtherCAT Specification
	Part 1: Overview and guidance		
	Part 2: Physical Layer service definition and protocol specification		
	Part 3: Data Link Layer service definition		
	Part 4: Data Link Layer protocol specification		
	Part 5: Application Layer service definition		
	Part 6: Application Layer protocol specification		

IS : International Standard

© EtherCAT Technology Group

Standards and References

EtherCAT Basics
Slave Structure
Device Model (ISO/OSI)
Physical Layer
Data Link Layer
Frame Structure
Addressing
Commands
Memory/Registers
SyncManager
FMMU
Diagnosis
Distributed Clocks
Application Layer
State Machine
Mailbox
Mailbox Interface
EoE Ethernet
CoE CANopen
FoE File Access
SoE Servo Drive
ESI: Device Description
SII: Slave Information /IF
Device Profiles
Modular Devices
Drives
Configuration Tool
EtherCAT Master
Standards&Implementation

Standard	Title	Status	Remarks
IEC 61784	Digital data communication for measurement and control		
	Part 1: Profile sets for continuous and discrete manufacturing relative to fieldbus use in industrial control systems	IS	
	Part 2: Additional profiles for ISO/IEC 8802-3 based communication networks in real-time applications	IS	CPF12: EtherCAT
IEC 61800	Adjustable speed electrical power drive systems		
	Part 7-1: Generic interface and use of profiles for power drive systems – Interface definition	IS	Part 7: Drive Profiles
	Part 7-2: Generic interface and use of profiles for power drive systems – Profile specifications	IS	
	Part 7-3: Generic interface and use of profiles for power drive systems – Mapping of profiles to network technologies	IS	Mapping EtherCAT to CANopen* CiA402 and SERCOS

© EtherCAT Technology Group
* CANopen is a trademark of the CAN in Automation e.V.

Standards and References

EtherCAT Basics
Slave Structure
Device Model (ISO/OSI)
Physical Layer
Data Link Layer
Frame Structure
Addressing
Commands
Memory/Registers
SyncManager
FMMU
Diagnosis
Distributed Clocks
Application Layer
State Machine
Mailbox
Mailbox Interface
EoE Ethernet
CoE CANopen
FoE File Access
SoE Servo Drive
ESI: Device Description
SII: Slave Information /IF
Device Profiles
Modular Devices
Drives
Configuration Tool
EtherCAT Master
Standards&Implementation

Standard	Title	Status	Remarks
ISO 15745	Industrial automation systems and integration -- Open systems application integration framework	Ed 1	CANopen*
	Part 4 Amd 2: Profiles for Modbus TCP, EtherCAT and ETHERNET Powerlink	PRF Amd	Mapping EtherCAT to CANopen* CiA301

PRF Amd: : Proof of a new International Standard, Amendment

© EtherCAT Technology Group
* CANopen is a trademark of the CAN in Automation e.V.

IEC 61158 / ETG.1000

EtherCAT Basics
Slave Structure
Device Model (ISO/OSI)
Physical Layer
Data Link Layer
Frame Structure
Addressing
Commands
Memory/Registers
SyncManager
FMMU
Diagnosis
Distributed Clocks
Application Layer
State Machine
Mailbox
Mailbox Interface
EoE Ethernet
CoE CANopen
FoE File Access
SoE Servo Drive
ESI: Device Description
SII: Slave Information /IF
Device Profiles
Modular Devices
Drives
Configuration Tool
EtherCAT Master
Standards&Implementation

- Digital data communication for measurement and control – Fieldbus for use in industrial control systems
- *The* communication standard
- EtherCAT is named Type 12 in IEC 61158 (no brand names allowed)
- Transformation of the communication protocol to a common model

© EtherCAT Technology Group

IEC 61158 – DL/AL services and protocols

EtherCAT Basics
Slave Structure
Device Model (ISO/OSI)
Physical Layer
Data Link Layer
- Frame Structure
- Addressing
- Commands
- Memory/Registers
- SyncManager
- FMMU
- Diagnosis

Distributed Clocks
Application Layer
- State Machine

Mailbox
- Mailbox Interface
- EoE Ethernet
- CoE CANopen
- FoE File Access
- SoE Servo Drive

ESI: Device Description
SII: Slave Information /IF
Device Profiles
- Modular Devices
- Drives

Configuration Tool
EtherCAT Master
Standards&Implementation

Users	Implementers
AL Services Part 5 in IEC 61158 • Model and Concepts • Data type definitions • Application Objects • Service description • Communication Management	AL Protocol Part 6 in IEC 61158 • Syntax definition and Coding • Application Relationship Procedures • State Machines
DL Services Part 3 in IEC 61158 • Model and Concepts • Service description • Register Description (DL objects)	DL Protocol Part 4 in IEC 61158 • Coding • Medium Access • State Machines

© EtherCAT Technology Group

Further EtherCAT standards

EtherCAT Basics
Slave Structure
Device Model (ISO/OSI)
Physical Layer
Data Link Layer
Frame Structure
Addressing
Commands
Memory/Registers
SyncManager
FMMU
Diagnosis
Distributed Clocks
Application Layer
State Machine
Mailbox
Mailbox Interface
EoE Ethernet
CoE CANopen
FoE File Access
SoE Servo Drive
ESI: Device Description
SII: Slave Information /IF
Device Profiles
Modular Devices
Drives
Configuration Tool
EtherCAT Master
Standards&Implementation

- ETG.1300 Indicator and Labeling specification
  - defines the implementation of indicators signaling the EtherCAT communication state, errors and the link status.
  - the location, labeling and blink codes of the indicators are defined
  - defines the labeling of the EtherCAT Ports

- ETG.9001 Marking Rules
  - specifies the marking rules for products and the corresponding documentation using the EtherCAT technology
  - Use of trademarks and logo

These specifications can be found on the ETG Website
http://www.ethercat.org/en/publications.html#members_area

© EtherCAT Technology Group

Further EtherCAT standards

EtherCAT Basics
Slave Structure
Device Model (ISO/OSI)
Physical Layer
Data Link Layer
Frame Structure
Addressing
Commands
Memory/Registers
SyncManager
FMMU
Diagnosis
Distributed Clocks
Application Layer
State Machine
Mailbox
Mailbox Interface
EoE Ethernet
CoE CANopen
FoE File Access
SoE Servo Drive
ESI: Device Description
SII: Slave Information /IF
Device Profiles
Modular Devices
Drives
Configuration Tool
EtherCAT Master
Standards&Implementation

- ETG.2000 EtherCAT Slave Information specification
  - describes the ESI schema
- ETG.2100 EtherCAT Network Information specification
  - describes the ENI schema

These specifications can be found on the ETG Website
http://www.ethercat.org/en/publications.html#members_area

© EtherCAT Technology Group

Further EtherCAT standards

EtherCAT Basics
Slave Structure
Device Model (ISO/OSI)
Physical Layer
Data Link Layer
Frame Structure
Addressing
Commands
Memory/Registers
SyncManager
FMMU
Diagnosis
Distributed Clocks
Application Layer
State Machine
Mailbox
Mailbox Interface
EoE Ethernet
CoE CANopen
FoE File Access
SoE Servo Drive
ESI: Device Description
SII: Slave Information /IF
Device Profiles
Modular Devices
Drives
Configuration Tool
EtherCAT Master
Standards&Implementation

- ETG.2200 EtherCAT Slave Implementation Guideline
  - describes from a very practical point of view which topics have to be kept in mind for a successful EtherCAT slave implementation
- ETG.6010 CiA402 Implementation Guideline
  - defines a common behavior of an EtherCAT servo drive supporting the CiA402 drive profile

These specifications can be found on the ETG Website
http://www.ethercat.org/en/publications.html

© EtherCAT Technology Group

EtherCAT Knowledge Base

EtherCAT Basics
Slave Structure
Device Model (ISO/OSI)
Physical Layer
Data Link Layer
Frame Structure
Addressing
Commands
Memory/Registers
SyncManager
FMMU
Diagnosis
Distributed Clocks
Application Layer
State Machine
Mailbox
Mailbox Interface
EoE Ethernet
CoE CANopen
FoE File Access
SoE Servo Drive
ESI: Device Description
SII: Slave Information /IF
Device Profiles
Modular Devices
Drives
Configuration Tool
EtherCAT Master
Standards&Implementation

- The EtherCAT Knowledge Base
  - contains guidelines, application notes, recommendations, technical information,
  - http://www.ethercat.org/infosys.html

- Content of the Knowledge Base
  - ETG.1400 EtherCAT Technology Description
  - ETG.1020 EtherCAT Guidelines & Protocol Enhancements
  - ETG.5001 EtherCAT Modular Device Profile
  - FAQs

  - ETG.1020 and ETG.5001 are part of the EtherCAT specification!

© EtherCAT Technology Group

EtherCAT Policies

EtherCAT Basics
Slave Structure
Device Model (ISO/OSI)
Physical Layer
Data Link Layer
Frame Structure
Addressing
Commands
Memory/Registers
SyncManager
FMMU
Diagnosis
Distributed Clocks
Application Layer
State Machine
Mailbox
Mailbox Interface
EoE Ethernet
CoE CANopen
FoE File Access
SoE Servo Drive
ESI: Device Description
SII: Slave Information /IF
Device Profiles
Modular Devices
Drives
Configuration Tool
EtherCAT Master
Standards&Implementation

- EtherCAT Vendor ID Policy
- EtherCAT Conformance Test Policy

- Download
  - http://www.ethercat.org/en/publications.html

© EtherCAT Technology Group

ETG By-Laws + Policies: Overview

ETG By-Laws
- Structure of ETG
- Membership Assembly
- IPR Rules (no hidden IPR)
- Member Logo Usage
- ETG/EtherCAT Logo Usage
- Membership Assembly / Board of Directors passes and implements Policies + Guidelines
- Membership free of charge, unless Membership Assembly decides to change this

Conformance Test Policy
- *Conformance Testing* can be done in-house, using the Conformance Test Tool (CTT)
- Conformance only with valid Vendor ID
- Test Tool (CTT) Subscription mandatory
- *EtherCAT Conformance Testing*: official test in official EtherCAT Test Center (ETC)
- Only test in ETC qualifies for certificate
- Technical Advisory Board: instance for appeals
- Policy accepted unanomiously by Membership Assembly

Vendor ID Policy
- Vendor needs EtherCAT Vendor ID
- Vendor shall be ETG member
- Vendor shall follow Marking Rules

Vendor ID Agreement
- Products shall pass Conformance Test
- Vendor shall follow EtherCAT Standard
- Warranty Disclaimer

Marking Rules
- Products shall be marked with EtherCAT®, if possible
- Documentation shall contain patent reference

© EtherCAT Technology Group

Vendor ID Policy Introduction

© EtherCAT Technology Group

Vendor ID in IEC 61158-6-12 (EtherCAT Standard)

EtherCAT Basics
Slave Structure
Device Model (ISO/OSI)
Physical Layer
Data Link Layer
Frame Structure
Addressing
Commands
Memory/Registers
SyncManager
FMMU
Diagnosis
Distributed Clocks
Application Layer
State Machine
Mailbox
Mailbox Interface
EoE Ethernet
CoE CANopen
FoE File Access
SoE Servo Drive
ESI: Device Description
SII: Slave Information /IF
Device Profiles
Modular Devices
Drives
Configuration Tool
EtherCAT Master
Standards&Implementation

5.6.7.4.6 Identity Object

The Identity Object dictionary entry (index 0x1018) is specified in Table 72.

Table 72 – Identity Object

Sub-Index	Description	Data type	M/O/C	Access	PDO Mapping	Value
0	Number of entries	UNSIGNED8	M	R	No	4
1	Vendor ID	UNSIGNED32	M	R	No	Assigned uniquely by ETG
2	Product Code	UNSIGNED32	M	R	No	Assigned uniquely by Vendor
3	Revision Number	UNSIGNED32	M	R	No	Assigned uniquely by Vendor Bit 0-15: Minor Revision Number of the device Bit 16-31: Major Revision Number of the device
4	Serial Number	UNSIGNED32	M	R	No	Assigned uniquely for this device by Vendor 0 if there is no serial number given

© EtherCAT Technology Group

Vendor ID Principles (I)

EtherCAT Basics
Slave Structure
Device Model (ISO/OSI)
Physical Layer
Data Link Layer
Frame Structure
Addressing
Commands
Memory/Registers
SyncManager
FMMU
Diagnosis
Distributed Clocks
Application Layer
State Machine
Mailbox
Mailbox Interface
EoE Ethernet
CoE CANopen
FoE File Access
SoE Servo Drive
ESI: Device Description
SII: Slave Information /IF
Device Profiles
Modular Devices
Drives
Configuration Tool
EtherCAT Master
Standards&Implementation

- Each vendor of an EtherCAT Device shall be an ETG member and shall obtain and maintain a Vendor ID from the EtherCAT Technology Group.
- Definition of EtherCAT Device:
  - EtherCAT Device means any device with an EtherCAT master and/or slave interface, excluding infrastructure components such as cables and connectors and also excluding machines or machine lines.
  - Machine or Machine Line means an aggregation of components, optionally including but not limited to EtherCAT Devices, intended for a specific purpose.

© EtherCAT Technology Group

Vendor ID Principles (II)

EtherCAT Basics
Slave Structure
Device Model (ISO/OSI)
Physical Layer
Data Link Layer
Frame Structure
Addressing
Commands
Memory/Registers
SyncManager
FMMU
Diagnosis
Distributed Clocks
Application Layer
State Machine
Mailbox
Mailbox Interface
EoE Ethernet
CoE CANopen
FoE File Access
SoE Servo Drive
ESI: Device Description
SII: Slave Information /IF
Device Profiles
Modular Devices
Drives
Configuration Tool
EtherCAT Master
Standards&Implementation

- Manufacturers of machines or machine lines, which integrate and use EtherCAT Devices such as Automation Products in combination with or in such machines or machine lines, are not required to apply for and use a Vendor ID.
- In other words: End users do not have to be ETG member and do not need an ETG vendor ID – even though they are welcome to join ETG and also may get a vendor ID.

© EtherCAT Technology Group

Vendor ID Principles (III)

EtherCAT Basics
Slave Structure
Device Model (ISO/OSI)
Physical Layer
Data Link Layer
Frame Structure
Addressing
Commands
Memory/Registers
SyncManager
FMMU
Diagnosis
Distributed Clocks
Application Layer
State Machine
Mailbox
Mailbox Interface
EoE Ethernet
CoE CANopen
FoE File Access
SoE Servo Drive
ESI: Device Description
SII: Slave Information /IF
Device Profiles
Modular Devices
Drives
Configuration Tool
EtherCAT Master
Standards&Implementation

- The Vendor ID is free of charge.
- The vendor shall implement the Vendor ID in each EtherCAT Device prior to making it available on the market.
- In case a vendor uses several brand names different from his vendor brand, he shall use an individual vendor ID for each such brand name and the corresponding devices.

© EtherCAT Technology Group

How about products such as Interface boards?

EtherCAT Basics
Slave Structure
Device Model (ISO/OSI)
Physical Layer
Data Link Layer
Frame Structure
Addressing
Commands
Memory/Registers
SyncManager
FMMU
Diagnosis
Distributed Clocks
Application Layer
State Machine
Mailbox
Mailbox Interface
EoE Ethernet
CoE CANopen
FoE File Access
SoE Servo Drive
ESI: Device Description
SII: Slave Information /IF
Device Profiles
Modular Devices
Drives
Configuration Tool
EtherCAT Master
Standards&Implementation

- Definition of Communication Device:
  - Communication Device means an EtherCAT device for assembly with or mounting with an Automation Device for the general purpose of communication of the Automation Device via EtherCAT.
- Definition of Automation Device:
  - Automation Device means an EtherCAT Device for assembly with or mounting with a machine or machine line intended to use for the general purpose of driving, controlling, monitoring and communication of the machine or machine line.

© EtherCAT Technology Group

Typical Examples of *Communication Devices*:

EtherCAT Basics
Slave Structure
Device Model (ISO/OSI)
Physical Layer
Data Link Layer
- Frame Structure
- Addressing
- Commands
- Memory/Registers
- SyncManager
- FMMU
- Diagnosis

Distributed Clocks
Application Layer
- State Machine

Mailbox
- Mailbox Interface
- EoE Ethernet
- CoE CANopen
- FoE File Access
- SoE Servo Drive

ESI: Device Description
SII: Slave Information /IF
Device Profiles
- Modular Devices
- Drives

Configuration Tool
EtherCAT Master
Standards&Implementation

© EtherCAT Technology Group

Vendor ID for Communication Devices (I)

EtherCAT Basics
Slave Structure
Device Model (ISO/OSI)
Physical Layer
Data Link Layer
Frame Structure
Addressing
Commands
Memory/Registers
SyncManager
FMMU
Diagnosis
Distributed Clocks
Application Layer
State Machine
Mailbox
Mailbox Interface
EoE Ethernet
CoE CANopen
FoE File Access
SoE Servo Drive
ESI: Device Description
SII: Slave Information /IF
Device Profiles
Modular Devices
Drives
Configuration Tool
EtherCAT Master
Standards&Implementation

- Manufacturers of Communication Devices shall distribute those Communication Devices using their Secondary Vendor ID. Optionally they may also use their Vendor ID, e.g. for conformance testing.
- Definition of Secondary Vendor ID:
  - Secondary Vendor ID means a Vendor ID in the range of 0xE0000000:0xEFFFFFFF that the vendor of a Communication Device derives from his Vendor ID by an OR operation of his Vendor ID and 0xE0000000.
  - In the context of conformance testing a Secondary Vendor ID is not considered a valid Vendor ID.
  - Use of a Secondary Vendor ID in an Automation Device is prohibited.

© EtherCAT Technology Group

Vendor ID for Communication Devices (II)

EtherCAT Basics
Slave Structure
Device Model (ISO/OSI)
Physical Layer
Data Link Layer
Frame Structure
Addressing
Commands
Memory/Registers
SyncManager
FMMU
Diagnosis
Distributed Clocks
Application Layer
State Machine
Mailbox
Mailbox Interface
EoE Ethernet
CoE CANopen
FoE File Access
SoE Servo Drive
ESI: Device Description
SII: Slave Information /IF
Device Profiles
Modular Devices
Drives
Configuration Tool
EtherCAT Master
Standards&Implementation

- End Users or Integrators may use such Communication Devices without further modification, however, may re-distribute such devices (e.g. PCI Interface card products) only as part of a machine or machine line.
- Manufacturers of Automation Devices may use such Communication Devices (e.g. communication daughter board for drives) within or combined with their own Automation Devices, and shall re-program the Products with their own Vendor ID before re-distributing such Automation Devices.
- Manufacturers of Communication Devices shall explain the Vendor ID handling in their product documentation accordingly, e.g. like proposed in the annex of the Vendor ID policy.

© EtherCAT Technology Group

How to obtain an EtherCAT Vendor ID?

EtherCAT Basics
Slave Structure
Device Model (ISO/OSI)
Physical Layer
Data Link Layer
- Frame Structure
- Addressing
- Commands
- Memory/Registers
- SyncManager
- FMMU
- Diagnosis

Distributed Clocks
Application Layer
- State Machine

Mailbox
- Mailbox Interface
- EoE Ethernet
- CoE CANopen
- FoE File Access
- SoE Servo Drive

ESI: Device Description
SII: Slave Information /IF
Device Profiles
- Modular Devices
- Drives

Configuration Tool
EtherCAT Master
Standards&Implementation

http://www.ethercat.org/memberarea/vendor_id.asp

EtherCAT Technology Group

EN | CN HOME NEWS EVENTS PRESS CONTACT MEMBER AREA

Search →

EtherCAT
Technology
FAQs
Members
EtherCAT Technology Group
Products
Conformance
Downloads

Member Area:
News
Downloads
Evaluation Kits
Master Sample Code
Logos
Forum
EtherCAT Knowledge Base
Vendor ID

Log off

Vendor ID Assignment Form

Each EtherCAT compliant device has to implement the worldwide unique Vendor ID assigned by ETG. This Vendor ID is a numeric value of type UNSIGNED32 and consists of a unique number for each registered company and optionally for each department of that company (only if required).

Please fill out "Department/Branch" only, if you need several Vendor IDs for your company. In this case please pick a specific name, i.e. "Germany", "Medical", etc. Names like "Development" or "Manufacturing" may not be accepted due to their broad range within the company.

31 … 24	23 … 0
Department	Company
MSB	LSB

Vendor ID assignment is free of charge.

Please assign an EtherCAT Vendor ID for:

(→) required Field

Company:
Department/Branch:
Name: →
Address: →
ZIP: →
City: →
Country: →
Phone: →
Fax:
Email: →
Desired Vendor ID* (4 Byte Hex-Code) **Existing Vendor-IDs**

© EtherCAT Technology Group

EtherCAT Vendor ID Agreement

EtherCAT Basics
Slave Structure
Device Model (ISO/OSI)
Physical Layer
Data Link Layer
- Frame Structure
- Addressing
- Commands
- Memory/Registers
- SyncManager
- FMMU
- Diagnosis

Distributed Clocks
Application Layer
- State Machine

Mailbox
- Mailbox Interface
- EoE Ethernet
- CoE CANopen
- FoE File Access
- SoE Servo Drive

ESI: Device Description
SII: Slave Information /IF
Device Profiles
- Modular Devices
- Drives

Configuration Tool
EtherCAT Master
Standards&Implementation

- Applicants for an EtherCAT Vendor ID have to accept the Vendor ID Agreement

- **The Vendor ID Agreement:**
- Demands Conformance for EtherCAT products
- Governs the use of the EtherCAT Trademarks (including reference to the EtherCAT Marking Rules)
- Contains a Disclaimer (“Technology provided “as is”, with no warranty implied…)

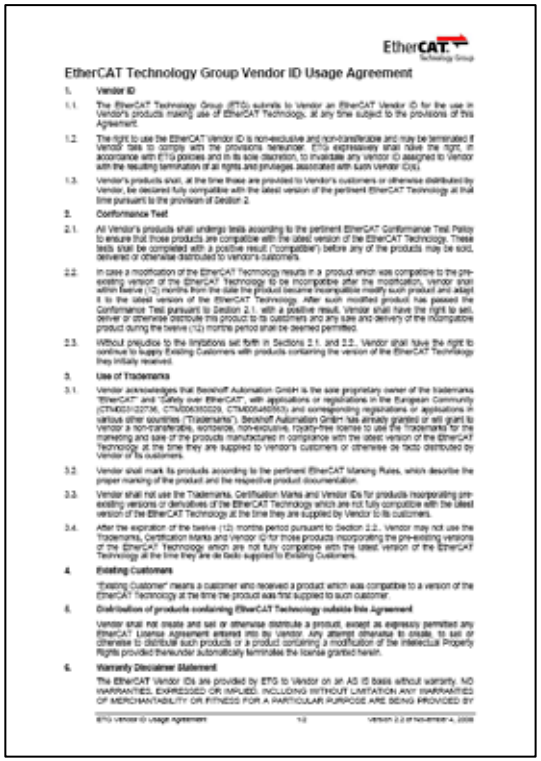

EtherCAT Technology Group Vendor ID Usage Agreement

1. Vendor ID

1.1. The EtherCAT Technology Group (ETG) submits to Vendor an EtherCAT Vendor ID for the use in Vendor's products making use of EtherCAT Technology, at any time subject to the provisions of this Agreement.

1.2. The right to use the EtherCAT Vendor ID is non-exclusive and non-transferable and may be terminated if Vendor fails to comply with the provisions hereunder. ETG expressively shall have the right, in accordance with ETG policies and in its sole discretion, to invalidate any Vendor ID assigned to Vendor with the resulting termination of all rights and privileges associated with such Vendor ID(s).

1.3. Vendor's products shall, at the time these are provided to Vendor's customers or otherwise distributed by Vendor, be declared fully compatible with the latest version of the pertinent EtherCAT Technology at that time pursuant to the provision of Section 2.

2. Conformance Test

2.1. All Vendor's products shall undergo tests according to the pertinent EtherCAT Conformance Test Policy to ensure that those products are compatible with the latest version of the EtherCAT Technology. These tests shall be completed with a positive result ("compatible") before any of the products may be sold, delivered or otherwise distributed to Vendor's customers.

2.2. In case a modification of the EtherCAT Technology results in a product which was compatible to the pre-existing version of the EtherCAT Technology to be incompatible after the modification, Vendor shall within twelve (12) months from the date the product became incompatible modify such product and adapt it to the latest version of the EtherCAT Technology. After such modified product has passed the Conformance Test pursuant to Section 2.1. with a positive result, Vendor shall have the right to sell, deliver or otherwise distribute this product to its customers and any sale and delivery of the incompatible product during the twelve (12) months period shall be deemed permitted.

2.3. Without prejudice to the limitations set forth in Sections 2.1. and 2.2., Vendor shall have the right to continue to supply Existing Customers with products containing the version of the EtherCAT Technology they initially received.

3. Use of Trademarks

3.1. Vendor acknowledges that Beckhoff Automation GmbH is the sole proprietary owner of the trademarks "EtherCAT" and "Safety over EtherCAT", with applications or registrations in the European Community (CTM0001027M, CTM0063850029, CTM0054407863) and corresponding registrations or applications in various other countries ("Trademarks"). Beckhoff Automation GmbH has already granted or will grant to Vendor a non-transferable, worldwide, non-exclusive, royalty-free license to use the Trademarks for the marketing and sale of the products manufactured in compliance with the latest version of the EtherCAT Technology at the time they are supplied to Vendor's customers or otherwise de facto distributed by Vendor of its customers.

3.2. Vendor shall mark its products according to the pertinent EtherCAT Marking Rules, which describe the proper marking of the product and the respective product documentation.

3.3. Vendor shall not use the Trademarks, Certification Marks and Vendor IDs for products incorporating pre-existing versions or derivatives of the EtherCAT Technology which are not fully compatible with the latest version of the EtherCAT Technology at the time they are supplied by Vendor to its customers.

3.4. After the expiration of the twelve (12) months period pursuant to Section 2.2., Vendor may not use the Trademarks, Certification Marks and Vendor ID for those products incorporating the pre-existing versions of the EtherCAT Technology which are not fully compatible with the latest version of the EtherCAT Technology at the time they are de facto supplied to Existing Customers.

4. Existing Customers

"Existing Customer" means a customer who received a product which was compatible to a version of the EtherCAT Technology at the time the product was first supplied to such customer.

5. Distribution of products containing EtherCAT Technology outside this Agreement

Vendor shall not create and sell or otherwise distribute a product, except as expressly permitted any EtherCAT License Agreement entered into by Vendor. Any attempt otherwise to create, to sell or otherwise to distribute such products or a product containing a modification of the Intellectual Property Rights provided thereunder automatically terminates the license granted herein.

6. Warranty Disclaimer Statement

The EtherCAT Vendor IDs are provided by ETG to Vendor on an AS IS basis without warranty. NO WARRANTIES, EXPRESSED OR IMPLIED, INCLUDING WITHOUT LIMITATION ANY WARRANTIES OF MERCHANTABILITY OR FITNESS FOR A PARTICULAR PURPOSE ARE BEING PROVIDED BY

ETG Vendor ID Usage Agreement 1.0 Version 2.2.0 (No-Email-A, 2008)

© EtherCAT Technology Group

Vendor ID: Summary

EtherCAT Basics
Slave Structure
Device Model (ISO/OSI)
Physical Layer
Data Link Layer
Frame Structure
Addressing
Commands
Memory/Registers
SyncManager
FMMU
Diagnosis
Distributed Clocks
Application Layer
State Machine
Mailbox
Mailbox Interface
EoE Ethernet
CoE CANopen
FoE File Access
SoE Servo Drive
ESI: Device Description
SII: Slave Information /IF
Device Profiles
Modular Devices
Drives
Configuration Tool
EtherCAT Master
Standards&Implementation

- EtherCAT Devices need an EtherCAT Vendor ID
- End users (such as Machine Builders) do not need an own Vendor ID*
- If you have no own EtherCAT Vendor ID yet, go to EtherCAT Technology Group Website (Members Section), and apply for one!
- And one final remark: A Vendor ID obtained from any other organization is not valid for EtherCAT devices…

* For Details see Vendor ID Policy

© EtherCAT Technology Group

Conformance Testing
+
Product Certification

Frequently Asked Questions

© EtherCAT Technology Group

Frequently Asked Questions (I)

EtherCAT Basics
Slave Structure
Device Model (ISO/OSI)
Physical Layer
Data Link Layer
Frame Structure
Addressing
Commands
Memory/Registers
SyncManager
FMMU
Diagnosis
Distributed Clocks
Application Layer
State Machine
Mailbox
Mailbox Interface
EoE Ethernet
CoE CANopen
FoE File Access
SoE Servo Drive
ESI: Device Description
SII: Slave Information /IF
Device Profiles
Modular Devices
Drives
Configuration Tool
EtherCAT Master
Standards&Implementation

- What is the difference between *Conformance Test* and *EtherCAT Conformance Test*?
  - Within the context of the ETG Conformance Test Policy:
  - *Conformance Test* is the Test, in which the conformance of the Device under Test (DuT) with the EtherCAT Specifications is tested with the help of a Conformance Test Tool.
  - *EtherCAT Conformance Test*: Conformance Test, Interoperability Test and Physical Layer Test carried out by an EtherCAT Test Center.
  - So the *EtherCAT Conformance Test* is a superset of the *Conformance Test*.
  - (this wording was introduced for historical reasons)

© EtherCAT Technology Group

Conformance Test Tool (CTT)

EtherCAT Basics
Slave Structure
Device Model (ISO/OSI)
Physical Layer
Data Link Layer
Frame Structure
Addressing
Commands
Memory/Registers
SyncManager
FMMU
Diagnosis
Distributed Clocks
Application Layer
State Machine
Mailbox
Mailbox Interface
EoE Ethernet
CoE CANopen
FoE File Access
SoE Servo Drive
ESI: Device Description
SII: Slave Information /IF
Device Profiles
Modular Devices
Drives
Configuration Tool
EtherCAT Master
Standards&Implementation

- Test Tool
  - Validates conformity for protocol layer
  - Helps to find errors during development due to detailed error description
  - Helps to improve support: detailed information saved with CTT project file

© EtherCAT Technology Group

Conformance Test Tool (CTT)

EtherCAT Basics
Slave Structure
Device Model (ISO/OSI)
Physical Layer
Data Link Layer
- Frame Structure
- Addressing
- Commands
- Memory/Registers
- SyncManager
- FMMU
- Diagnosis

Distributed Clocks
Application Layer
- State Machine

Mailbox
- Mailbox Interface
- EoE Ethernet
- CoE CANopen
- FoE File Access
- SoE Servo Drive

ESI: Device Description
SII: Slave Information /IF
Device Profiles
- Modular Devices
- Drives

Configuration Tool
EtherCAT Master
Standards&Implementation

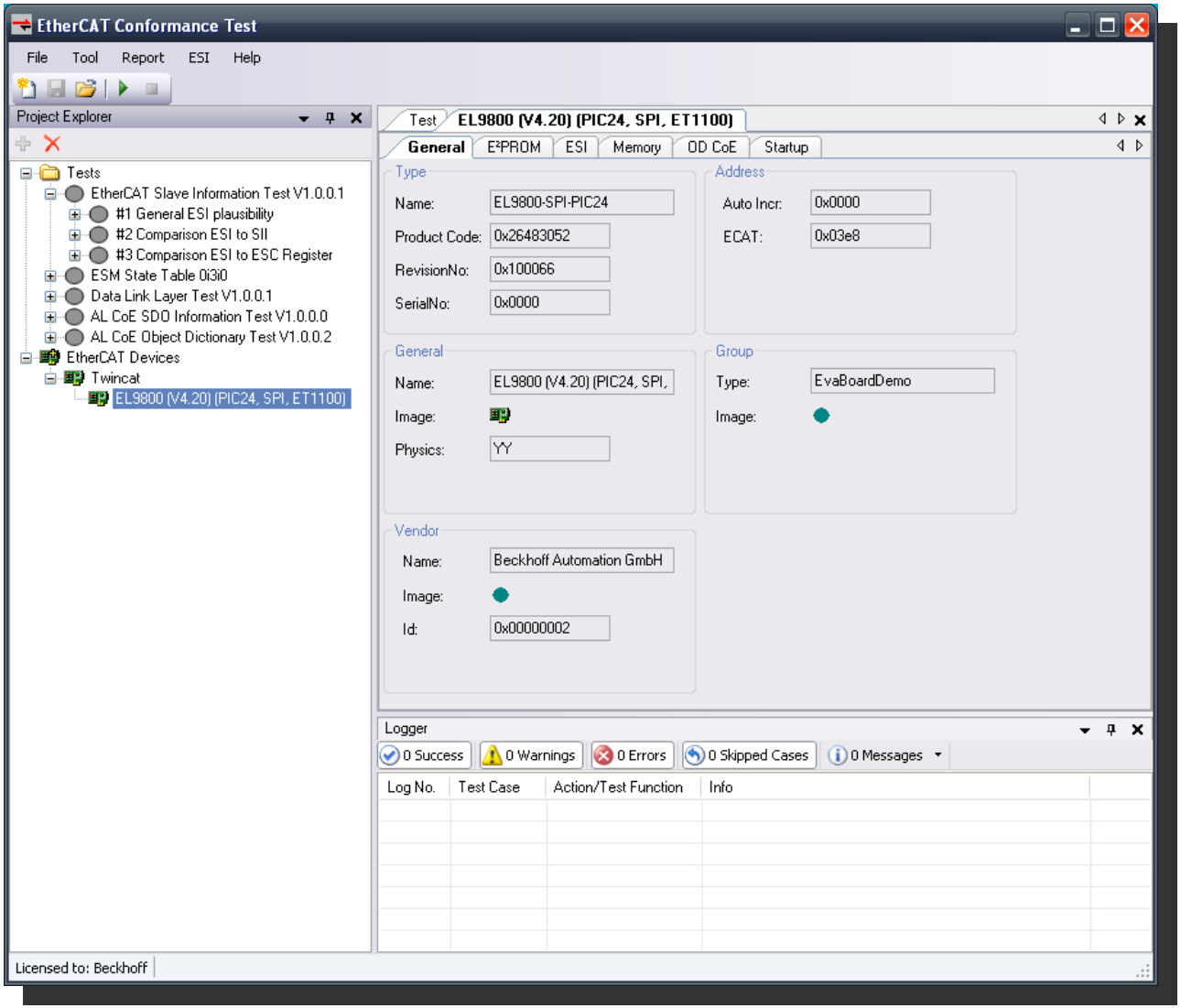

© EtherCAT Technology Group

Conformance Test Tool – Features

- Test ID: frames of every single test can be easily found in a network scan (e.g. Wireshark) due to a NOP cmd. containing the TestID, GroupID and CaseID

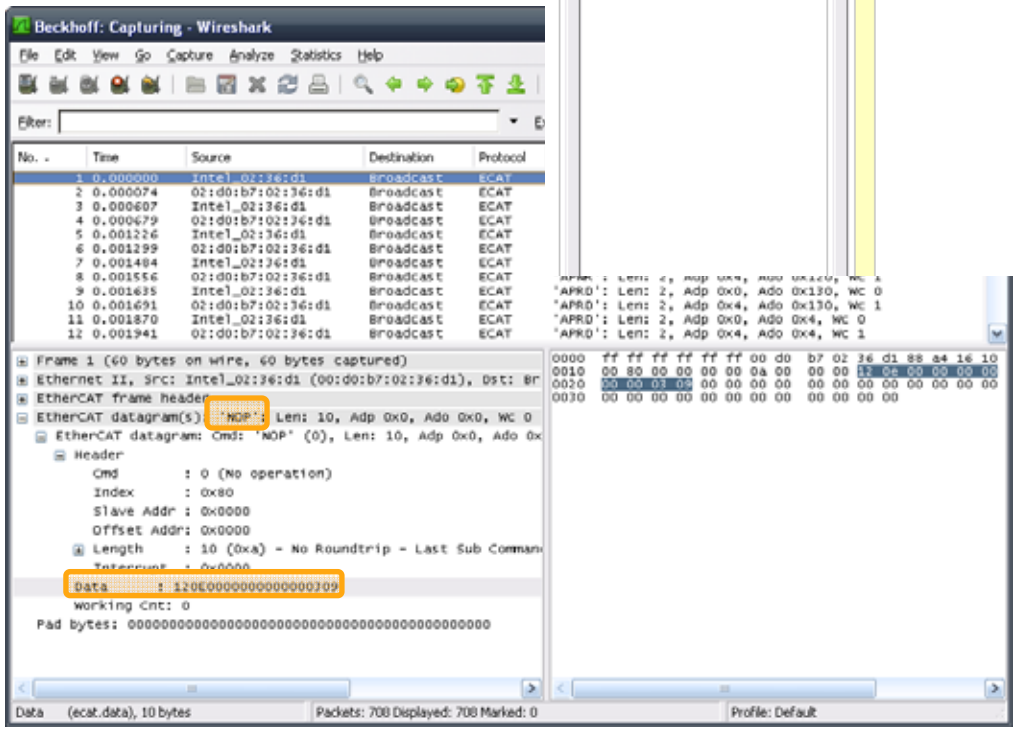

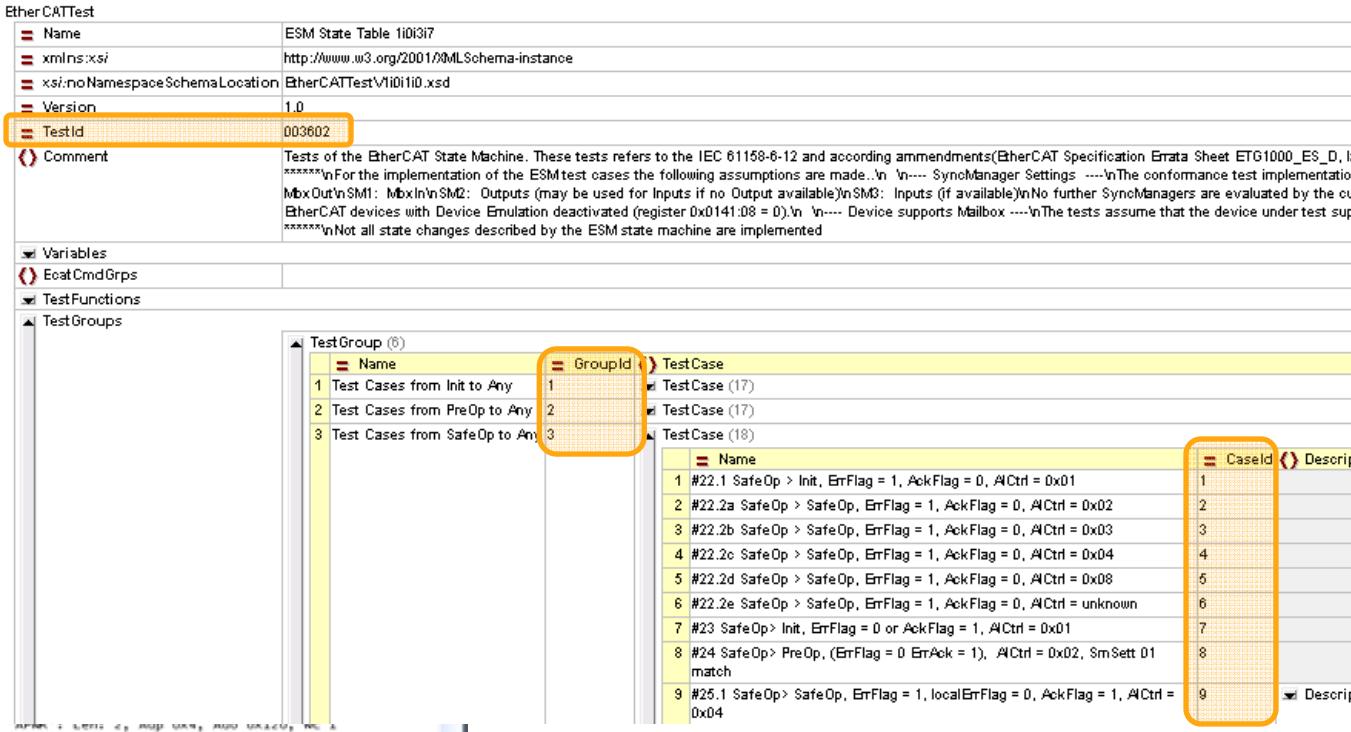

In Wireshark Scan:

NOP Command (Cmd Type0x00)

Version_TestID_GroupID_CaseID

© EtherCAT Technology Group

Conformance Test Tool – Features

- Test description: integrated into test cases
  - Pre Condition
  - Action
  - Post Condition

- Output: messages in Logger window:
  - warnings
    are highly recommended to fix
  - errors
    have to be fixed
  - messages / success
    information

- Verbose mode:
  More information during the test procedure

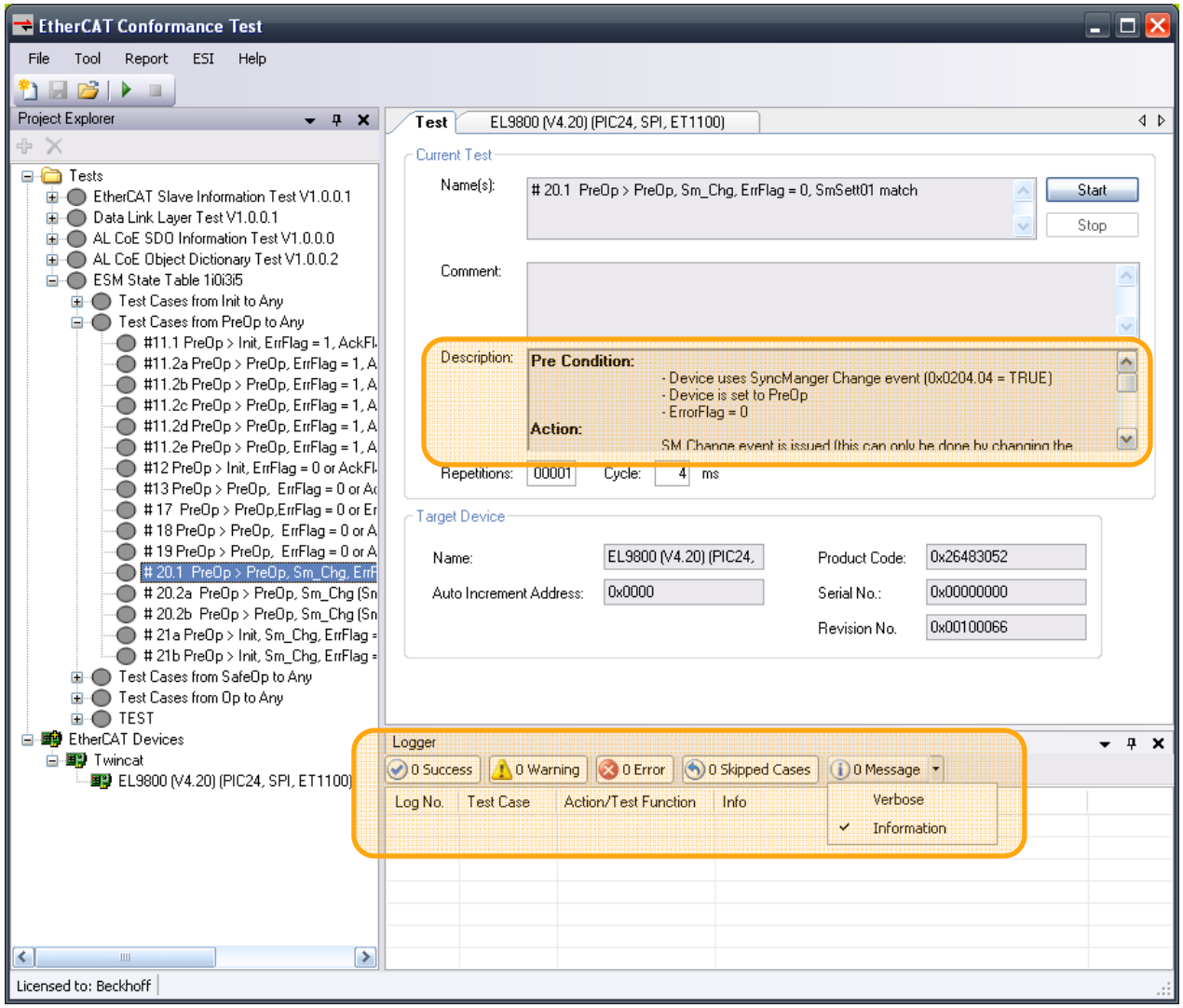

© EtherCAT Technology Group

Frequently Asked Questions (II)

EtherCAT Basics
Slave Structure
Device Model (ISO/OSI)
Physical Layer
Data Link Layer
Frame Structure
Addressing
Commands
Memory/Registers
SyncManager
FMMU
Diagnosis
Distributed Clocks
Application Layer
State Machine
Mailbox
Mailbox Interface
EoE Ethernet
CoE CANopen
FoE File Access
SoE Servo Drive
ESI: Device Description
SII: Slave Information /IF
Device Profiles
Modular Devices
Drives
Configuration Tool
EtherCAT Master
Standards&Implementation

- I am an EtherCAT device vendor. Do I have to license the conformance test tool?
  - Yes. The ETG takes conformance very seriously, and the availability of the conformance test tool at each and every device vendors R&D lab is an important cornerstone in this process
- Do I have to submit my EtherCAT device to the EtherCAT Test Center for testing?
  - No. Conformance Testing with the Test Tool „at home“ is sufficient to meet the minimum requirements of the Vendor ID agreement.
- Can I get a Conformance Certificate based on the test results obtained in my R&D lab?
  - No. The Conformance Certificate can only be issued after successfully passing the test at an accredited EtherCAT Test Center.

© EtherCAT Technology Group

Frequently Asked Questions (III)

EtherCAT Basics
Slave Structure
Device Model (ISO/OSI)
Physical Layer
Data Link Layer
Frame Structure
Addressing
Commands
Memory/Registers
SyncManager
FMMU
Diagnosis
Distributed Clocks
Application Layer
State Machine
Mailbox
Mailbox Interface
EoE Ethernet
CoE CANopen
FoE File Access
SoE Servo Drive
ESI: Device Description
SII: Slave Information /IF
Device Profiles
Modular Devices
Drives
Configuration Tool
EtherCAT Master
Standards&Implementation

- Does the test in the EtherCAT Test Center exceed the test done with the Conformance Test Tool (at home)?
  - Yes. The test in the EtherCAT Test Center also includes an interoperability test, checking for conformance regarding the indicator and labeling spec, the marking rules etc.
- I know about the EtherCAT Test Center in Nuremberg, Germany. Will there be other locations, too?
  - Yes. In 2009 an EtherCAT Test Center in Japan will be established, and there are plans for further test centers in Europe and North America.
- How much is charged for the EtherCAT Conformance Test at the EtherCAT Test Center?
  - Please contact the EtherCAT Test Center for pricing information – pricing is not within the scope of ETG.

© EtherCAT Technology Group

Frequently Asked Questions (IV)

EtherCAT Basics
Slave Structure
Device Model (ISO/OSI)
Physical Layer
Data Link Layer
Frame Structure
Addressing
Commands
Memory/Registers
SyncManager
FMMU
Diagnosis
Distributed Clocks
Application Layer
State Machine
Mailbox
Mailbox Interface
EoE Ethernet
CoE CANopen
FoE File Access
SoE Servo Drive
ESI: Device Description
SII: Slave Information /IF
Device Profiles
Modular Devices
Drives
Configuration Tool
EtherCAT Master
Standards&Implementation

- Does the Certificate expire?
  - No. The Certificate confirms that a device of a certain release has passed the current test version in the EtherCAT Test Center. Of course the Certificate can neither confirm that all future releases of the device will also pass, nor that the current device release will pass all future enhancements of the EtherCAT Conformance Test.
- Do I have to submit my device again once I released a newer version?
  - No. However, according to the Vendor ID agreement, you will have to test future releases of your product against the conformance test tool in your R&D lab. Of course you may also submit your device again to the EtherCAT Test Center and obtain a new certificate!

© EtherCAT Technology Group

Conformance Testing Procedure

EtherCAT Basics
Slave Structure
Device Model (ISO/OSI)
Physical Layer
Data Link Layer
Frame Structure
Addressing
Commands
Memory/Registers
SyncManager
FMMU
Diagnosis
Distributed Clocks
Application Layer
State Machine
Mailbox
Mailbox Interface
EoE Ethernet
CoE CANopen
FoE File Access
SoE Servo Drive
ESI: Device Description
SII: Slave Information /IF
Device Profiles
Modular Devices
Drives
Configuration Tool
EtherCAT Master
Standards&Implementation

- Vendor contacts ETG office if he wants EtherCAT CT
- ETG checks Vendor ID and provides Test Contract – which also allows one to select the EtherCAT Conformance Test Center (ETC).
- Based on choice of vendor, ETG office forwards request to ETC
- ETC provides formal offer to vendor (ETG is not involved in any financial transaction)
- ETC provides checklist to vendor (how to prepare, what to send, etc.)
- Vendor sends device to ETC (or brings it there) .
- ETC tests device.
- ETC sends Test Report to Vendor and to ETG office.
- If test was passed successfully, ETG provides Certificate.

© EtherCAT Technology Group

Conformance Test Mark

EtherCAT Basics
Slave Structure
Device Model (ISO/OSI)
Physical Layer
Data Link Layer
Frame Structure
Addressing
Commands
Memory/Registers
SyncManager
FMMU
Diagnosis
Distributed Clocks
Application Layer
State Machine
Mailbox
Mailbox Interface
EoE Ethernet
CoE CANopen
FoE File Access
SoE Servo Drive
ESI: Device Description
SII: Slave Information /IF
Device Profiles
Modular Devices
Drives
Configuration Tool
EtherCAT Master
Standards&Implementation

- Devices that have passed the ETC Conformance Test may carry the official conformance test mark
- End users are encouraged to include the availability of the conformance test mark in their vendor and device selection process.

EtherCAT Conformance tested

© EtherCAT Technology Group

Conformance Test Summary

EtherCAT Basics
Slave Structure
Device Model (ISO/OSI)
Physical Layer
Data Link Layer
Frame Structure
Addressing
Commands
Memory/Registers
SyncManager
FMMU
Diagnosis
Distributed Clocks
Application Layer
State Machine
Mailbox
Mailbox Interface
EoE Ethernet
CoE CANopen
FoE File Access
SoE Servo Drive
ESI: Device Description
SII: Slave Information /IF
Device Profiles
Modular Devices
Drives
Configuration Tool
EtherCAT Master
Standards&Implementation

- EtherCAT Test Center is operational and available for testing
- Certificate is issued by ETG after passing test at ETC
- Every Vendor shall have (and use!) the Conformance Test Tool
- Testing at the ETC is optional, but highly recommended

© EtherCAT Technology Group

Official Conformance Test Center

EtherCAT Basics
Slave Structure
Device Model (ISO/OSI)
Physical Layer
Data Link Layer
Frame Structure
Addressing
Commands
Memory/Registers
SyncManager
FMMU
Diagnosis
Distributed Clocks
Application Layer
State Machine
Mailbox
Mailbox Interface
EoE Ethernet
CoE CANopen
FoE File Access
SoE Servo Drive
ESI: Device Description
SII: Slave Information /IF
Device Profiles
Modular Devices
Drives
Configuration Tool
EtherCAT Master
Standards&Implementation

EtherCAT Test Center (ETC), Nuremberg

EtherCAT Test Center
Beckhoff Automation GmbH
Ostendstraße 196
90482 Nuremberg, Germany
Tel.: +49 (911) 5 40 56 20
Fax: +49 (911) 5 40 56 29
etc@beckhoff.com

EtherCAT Test Center (ETC), Kyoto

EtherCAT Test Center
ASTEM RI
134 Chudoji Minami-machi, Shimogyo,
Kyoto 600-8813 Japan
Tel.: +81 (75) 366 0143
Fax: +81 (75) 315 2899
etc@testlab.astem.or.jp

© EtherCAT Technology Group

Conformance Test - Questions?

EtherCAT Basics
Slave Structure
Device Model (ISO/OSI)
Physical Layer
Data Link Layer
Frame Structure
Addressing
Commands
Memory/Registers
SyncManager
FMMU
Diagnosis
Distributed Clocks
Application Layer
State Machine
Mailbox
Mailbox Interface
EoE Ethernet
CoE CANopen
FoE File Access
SoE Servo Drive
ESI: Device Description
SII: Slave Information /IF
Device Profiles
Modular Devices
Drives
Configuration Tool
EtherCAT Master
Standards&Implementation

- If you have comments regarding the Conformance Test Procedure, please address them directly to conformance@ethercat.org

© EtherCAT Technology Group

Thanks for your attention! Any Questions?

EtherCAT Basics
Slave Structure
Device Model (ISO/OSI)
Physical Layer
Data Link Layer
- Frame Structure
- Addressing
- Commands
- Memory/Registers
- SyncManager
- FMMU
- Diagnosis

Distributed Clocks
Application Layer
- State Machine

Mailbox
- Mailbox Interface
- EoE Ethernet
- CoE CANopen
- FoE File Access
- SoE Servo Drive

ESI: Device Description
SII: Slave Information /IF
Device Profiles
- Modular Devices
- Drives

Configuration Tool
EtherCAT Master
Standards&Implementation

Please visit

www.ethercat.org

for more information

EtherCAT Technology Group
Headquarters
Ostendstraße 196
90482 Nuremberg, Germany
Phone: +49 911 54056 20
Fax: +49 911 54056 29
Email: info@ethercat.org

© EtherCAT Technology Group